**City of St. George**

# Energy Services

# Underground Power Construction Standards

# Updated October 2019

## TABLE OF CONTENTS

GENERAL PREFACE .....1
JOINT UTILITY COMMITTEE (JUC) STANDARDS .....2
CABLE INSTALLATION .....10
CABLE CAPS .....14
CABLE MARKING AND LOCATION .....15
CONDUIT INSTALLATION .....16
EQUIPMENT LOCATION AND RIGHT OF WAY REQUIREMENTS.....20
PRIMARY EQUIPMENT INSTALLATION..... 22
SECONDARY JUNCTION INSTALLATION .....24
CABLE SPLICES.....26
CABLE TERMINATIONS (200 AMP/600 AMP) .....26
TRANSFORMER INSTALLATION.....28
SINGLE PHASE PADMOUNTED DISTRIBUTION TRANSFORMER SPECIFICATION.....30
THREE PHASE PADMOUNTED DISTRIBUTION TRANSFORMER SPECIFICATION.....35
SECONDARY SERVICE LINE AND METER INSTALLATION FOR RESIDENTIAL, SUBDIVISIONS, MOBILE HOMES, TRAILER PARKS, APARTMENTS, CONDOMINIUMS, AND COMMERCIAL BUILDINGS .....39
STREETLIGHT INSTALLATION.....44
15 kV PRIMARY UNDERGROUND EPR CABLE SPECIFICATION .....47
PRIMARY JUNCTION VAULT SPECIFICATIONS .....50
PADMOUNT ENCLOSED SWITCH GEAR SPECIFICATIONS.....51

## DRAWING TABLE OF CONTENTS

THREE PHASE TRANSFORMER AND PAD DETAILS ..... D1 &D1-A
167 SINGLE PHASE TRANSFORMER AND PAD DETAILS.....D2
SINGLE PHASE TRANSFORMER AND PAD DETAILS..... D2-A
PAD MOUNT SWITCH GEAR DETAILS.....D3, D3-A &D3-B
PRIMARY SECTIONALIZING ENCLOSURE (THREE PHASE AND SINGLE PHASE).....D4
RESIDENTIAL SERVICE REQUIREMENTS DETAIL.....D5
MOBILE HOME AND TRAILERS SERVICE REQUIREMENTS DETAIL.....D6
UNDERGROUND TEMORARY POWER DETAIL.....D7
OVERHEAD TEMPORARY POWER DETAIL .....D8
ANCHOR BOLT TEMPLATE DETAIL FOR 35’ & 40’ STREET LIGHTS .....D9
ANCHOR BOLT TEMPLATE DETAIL FOR HADCO/COOPER STREET LIGHTS .....D10
FOOTING DETAIL FOR HADCO STREET LIGHTS.....D11
FOOTING DETAIL FOR COBRA HEAD STREET LIGHTS .....D12
SINGLE CONDUIT INSTALLATION DETAIL.....D13
MULTIPLE CONDUIT INSTALLATION DETAIL .....D14
90 DEGREE STEEL CONDUIT ELBOW DETAIL .....D15
PAD MOUNT TRANSFORMER & TRENCH LOCATION DETAIL .....D16
ADJOINING LOT CONDUIT DETAIL FOR SINGLE PHASE TRANSFORMER.....D17
TYPICAL JOINT UTILITY TRENCH DETAIL .....D18
TAGGING SYSTEM DETAIL .....D19

# GENERAL PREFACE

The City of St. George Energy Services Department has prepared and approved this set of standards and specifications for the purpose of maintaining a safe, consistent and reliable underground power distribution system. These standards are required to be used by anyone who is involved with design or installation of underground power distribution systems within the St. George City service territory. All high voltage, 600 volts or higher, underground power bids and installation shall be by a Pre-Qualified Electrical Contractor.

These standards and specifications will be used as a reference for all underground power distribution system inspections, which are required as part of the City of St. George Policy "Installation of High Voltage Equipment" (No. 10.84). During underground power distribution installation, an Energy Services Department Inspector will be present during conduit installation, trench backfilling, wire installation pulling and terminations.

In the event these standards and specifications are revised or changed, proper notice will be posted on the City of St. George website, www.sgcity.org. A determined phase-out period or arrangement will be made for a contractor who may have warehoused pre-purchased equipment that becomes obsolete due to the revision or change.

All material and equipment specified within these standards and specifications must be approved by St. George Energy Services.

# JOINT UTILITY COMMITTEE (JUC) STANDARDS

## Design and Construction Standards

The following Design and Construction Standards are to be followed at all times, unless a problem exists. When the standards cannot be followed, JUC will be required to approve the alternative.

1) St. George City or Pre-Qualified Engineers will be required to submit utility drawings as per the *Joint Utility Committee Utility Site Plan Review Process*. All utilities (i.e. gas, cable, phone, power, sewer and water) will be shown on the appropriate drawings. The JUC will approve the utility site plan when all requirements have been met.

2) Utility Site Plans should be submitted on D size paper (24" x 36") and will need to include the following:
   - Project Name and address
   - Vicinity map and proximity detail
   - Street names labeled
   - Developer name, address, and phone number
   - North arrow and scale
   - Joint Utility Trench detail
   - Utility notes for all utilities (as designated by each utility)
   - "Call before you dig" Bluestakes detail

3) Phone, cable, and power joint trench will be located on the north and west side of roadways, back of sidewalk within new developments (as much as possible) or opposite gas. In planned developments without sidewalks, joint utility trench will be 48" behind back of curb.

4) Cable and phone boxes will be located on the right and left side of power transformers and secondary boxes. Cable on the left and phone on the right looking from the street. There will be a 12" minimum spacing between boxes.

5) Water and Gas will be located on the south and east side of roadways with the gas line behind sidewalk and the waterline five (5) feet into roadway from curb, as much as possible or opposite power. In planned developments without sidewalks, the gas line will be located along the lip of curb. Waterline location will stay the same.

6) Gas mains will stay five (5) feet minimum off of back of sidewalk on public streets.

7) Gas and water long side stubs will be placed five (5) and three (3) feet, respectively, to the right and left of the property line, with gas on the left and water on the right, looking from the street.

8) Generally, sewer will be located 15 feet off power side curb and gutter. In private developments, the street centerline will be used to place sewer as much as possible.

9) For placement and layout of utilities in subdivisions, see *Typical Utility Layout for a Subdivision* detail.

10) For commercial projects, building layout, square footage, and building use will be required.

11) For multi-family residential projects, the number of units per lot and building will be required.

12) St. George pre-qualified electrical contractors will be responsible to install the joint trench as described and shown on the detail. Phone and cable will furnish their own conduit or install the conduit themselves within five (5) working days. The developer will pay additional costs forcible and phone conduit installation to the pre-qualified contractor.

13) In the Dixie Escalante Electric Service area, Dixie Escalante Electric will put in their power conduit and leave the trench for five (5) working days for other utilities to use common trench. Where common trenches are left open, safety standards/proper barricades will be placed and trench depths will not exceed 36 inches.

14) Once utilities are installed, there will be no open road cuts or new installation for two (2) years except for emergency repairs.

15) Utility conduits will be color coded as follows:

| | |
|---|---|
| Power | Black with red stripe or gray |
| Water | Blue or white or ductile iron |
| Sewer | Green or White |
| Gas | Orange or Yellow |
| Phone | White or Gray and labeled |
| Cable TV | Orange or Gray with 2” strip and company label |
| Communication | Multi Colors |

# JUC Procedures

**Power Design**

Pre-Qualified Engineer submits 1 Site Plan with Power requirements to Energy Services Department or to Dixie Escalante Electric. Power Agency returns marked plans to Engineer.

↓

## JUC First Review (1 Week)

Pre-Qualified Engineer puts power, water and sewer on site plan and submits 8 copies to Development Services Department
Engineer also schedules an appointment for next weeks JUC meeting.

JUC reviews plans and marks comments on plans for next meeting. Water, Power and Sewer Departments

↓

If the Pre-Qualified Engineer does not attend the meeting, he/she is required to reschedule for next weeks meeting.
If any utility does not attend meeting, they are required to return & review plans with the engineer before next weeks meeting.

↓

JUC needs an Engineering Acknowledgment form signed by Engineering Department before accepting plans for second review.

↓

## JUC Second Review (1 Week)

Pre-Qualified Engineer makes first review changes and submits 8 new copies to Development Services Department. Engineer also schedules appointment with JUC for the following meeting.

All Utilities review plans and have comments ready for next meeting.

↓

## JUC Third Review (if necessary)

If critical changes still need to be made, the JUC will require a third review. This review process will be the same as second review.

## Final Approval

Pre-Qualified Engineer makes final changes to plans and submits 9 full sets and 8 utility sets to Development Services Department for approval.

## JOINT UTILITY COMMITTEE
## Utility Site Plan Review Process
## (For Commercial and Residential Developments)

Set of Procedures (See Flow Chart)

1) The developer or representative meets with the Joint Utility Committee (JUC) on Tuesdays at 10:00 am to discuss project concepts and preliminary ideas, i.e. availability of utilities. JUC outlines procedures and standards. **Meeting time slots will be available until Tuesday at 9:00 am. After this time, slots requested will be scheduled for the following Tuesday.**

2) Developer contracts with Pre-Qualified Engineer to prepare site plan and utility drawings as per City Policy 10.92 and subdivision ordinance. **After this point, the JUC will interface only with the pre-qualified engineer or his representative and not the client directly. The developer/client is welcome to interface with the JUC provided the pre-qualified engineer is present.**

3) For all Commercial and Multi-Family Unit projects, developer or pre-qualified engineer submits Customer Connected Load form to a Licensed Electrical Engineer or Electrical Contractor performing work. Pre-qualified engineer submits load form with site plan to Energy Services Department/Dixie Escalante Electric for power design. For all residential single family projects, pre-qualified engineer submits site plan only for power design.

4) Energy Services Department/Dixie Escalante Electric completes power design and returns to pre-qualified engineer within a 2-week period.

5) Pre-qualified Engineer shows power on utility site plan and adds water and sewer design. Pre-qualified engineer then submits 8 sets of the utility site plan to Development Services Department. One copy of approved grading plan may also be required. The utility site plan will be prepared as per the **Joint Utility Committee Design and Construction Standards as well as the City Subdivision Ordinance.** The Development Services Department will distribute drawings to other utilities in the weekly JUC meeting for design and review. **Drawings should be submitted before Monday 5:00pm. If received after this time, the drawings will not be reviewed until the following week.**

6) Each utility will review the utility site plans submitted and will be prepared to discuss them in the following Tuesday meeting with the pre-qualified engineer.

7) The pre-qualified Engineer schedules time to meet with the JUC for the following Tuesday meeting to receive comments from 1st review. After meeting with the JUC, the pre-qualified engineer will incorporate all of the remaining utility designs & address comments from 1st review on the utility site plan.

8) The pre-qualified engineer submits construction drawings to Public Works Department for review and gets Engineering Acknowledgement form signed. **The JUC cannot continue review of utilities until Public Works Department has plans to review.**

9) Once changes from 1st review have been made, the pre-qualified engineer submits Engineering Acknowledgment form and 8 copies of the utility site plan to the Development Services Department for JUC 2nd review.

10) Each utility will review the utility site plans submitted and will be prepared to discuss them in the following Tuesday meeting with the pre-qualified engineer.

11) The pre-qualified Engineer schedules time to meet with the JUC for the following Tuesday meeting to receive comments from 2nd review. After meeting with the JUC, the pre-qualified engineer will address comments from 2nd review on the utility site plan. **If necessary, the JUC will request a 3rd review to be submitted. The process for 3rd review will follow the same guidelines as 2nd review.**

12) When all changes have been made, the pre-qualified engineer will resolve all issues with Public Works Department. Once all requirements from Public Works Department have been met, the pre-qualified engineer will submit 9 full construction sets and 8 utility sets to the Development Services Department for final signature and approval.

13) If no revisions are necessary, the full construction sets will be stamped by the JUC and returned to Public Works Department for signature. **Construction of utilities will not be allowed until all construction drawings are approved and stamped by appropriate city departments. JUC approval does not grant Notice to Proceed.**

14) With approved construction drawings, the developer proceeds to get pre-qualified electrical contractor to install power system with phone and cable conduits in same trench as per JUC construction standards. The developer also is responsible to get water and sewer systems installed and coordinate with the gas company for installation.

15) If the developer revises the approved utility site plan significantly during construction, the project will be stopped and the drawings will be required to pass through the approval process again.

16) If a utility or agency does not attend the regular Tuesday meeting or refuses to sign off on the design, the developer will be required to work out the situation with the utility and provide a letter to the JUC that the utility was contacted and the issue was worked out. The letter will address how the utility will be installed.

17) Developer will be required to pay for, but not limited to, transformer inspection, pad mounted switch bay, streetlights, CT meters and riser fees **before a permit is issued**. Contact Energy Services for a current cost break down.

18) **ST. GEORGE ENERGY SERVICES POWER NOTES**

1. PRIMARY POWER FROM SWITCH TO SWITCH SHALL BE 750 WIRE IN 3" CONDUIT.
2. PRIMARY POWER FROM VAULT TO TRANSFORMER SHALL BE 1/0 WIRE IN **3**" CONDUIT UNLESS OTHERWISE NOTED. ALL WIRE SHALL HAVE A TEMPERATURE RATING OF 90°C
3. SECONDARY POWER FROM TRANSFORMER TO METER (90°C TEMP. RATING):
   A. FOR RESIDENTIAL LOTS – WHERE LENGTH IS LESS THAN OR EQUAL TO 200-FT
      - 100 – 150 AMPS = 1/0 IN 2" CONDUIT
      - 200 AMPS = 4/0 IN 2" CONDUIT
      - 400 AMPS = 350 MCM IN 3" CONDUIT
      - 600 AMPS = 500 MCM IN 3" CONDUIT
      - CONTACT SGES FOR LENGTHS > 200-FT IF NOT SPECIFIED PER PLAN.

   B. FOR C.T. CONNECTIONS (SERVICES > 400 AMPS) – SECONDARY CONDUIT AND WIRE SHALL BE SIZED BY BUILDING ELECTRICAL ENGINEER.

   C. FOR COMMERCIAL AND/OR APARTMENT COMPLEX ≤ 400 AMPS, OR > 400 AMPS WITH GANG PACK INDIVIDUAL METERS – SIZED BY SGES BASED ON LOAD CALC'S.
4. CONTRACTOR TO FOLLOW ALL BLUE STAKES PROTOCOLS.
5. THE POWER DESIGN ON THIS UTILITY PLAN IS CONSIDERED BY ST. GEORGE ENERGY SERVICES (SGES) AS PRELIMINARY AND NON-BIDABLE UNTIL ACCOMPANIED BY A JUC APPROVAL STAMP.
6. ALL PRIMARY UNDERGROUND POWER WORK/INSTALLATION MUST BE COMPLETED BY A CONTRACTOR THAT HAS BEEN PREQUALIFIED BY SGES AND MEET ALL SGES STANDARDS. ALL OVERHEAD WORK/INSTALLATION MUST BE COMPLETED BY SGES.
7. ALL WORK DONE BY SGES WILL BE PREPAID BY THE DEVELOPER.
8. IT IS THE RESPONSIBILITY OF THE DESIGN ENGINEER TO PROVIDE LOCATION AND ELEVATION OF ALL EXISTING AND DESIGN UNDERGROUND/OVERHEAD UTILITIES AND STRUCTURES THAT WILL IMPACT THE SGES POWER DESIGN.

9. ALL JUC TRENCHES WILL BE BACKFILLED AND COMPACTED IN 6" TO 8" LIFTS TO A COMPACTION OF 95% IN ROADWAYS/SIDEWALKS AND 90% BEHIND SIDEWALK. TESTING IS TO BE DONE AT MIDDLE AND TOP OF TRENCH.
10. ALL CHANGES TO EXISTING GRADES NEAR EXISTING POWER UTILITIES MUST BE APPROVED BY SGES PRIOR TO CONSTRUCTION.
11. ANY IN FIELD CHANGES TO THE JUC APPROVED POWER DESIGN WILL BE AT THE DEVELOPER'S EXPENSE AND MUST BE PRE-APPROVED AND DOCUMENTED BY SGES PRIOR TO INSTALLATION.

## PROJECT POWER NOTES (RESIDENTIAL SUBDIVISIONS)

A. POWER LIMITATION: TRANSFORMERS, CONDUIT, AND WIRE SIZES SHOWN ARE BASED ON A STANDARD 200 AMP SERVICE PER RESIDENCE. SHOULD ANY LOT(S) IN THIS SUBDIVISION REQUIRE LARGER SERVICES, PLANS MUST BE RESUBMITTED TO UPSIZE ELECTRICAL EQUIPMENT AND WIRE RESPECTIVELY (SGES).
B. ALL SERVICES ARE SINGLE PHASE. IF THREE PHASE POWER IS REQUIRED ANYWHERE WITHIN THIS SUBDIVISION, THE PLAN WILL NEED TO BE RESUBMITTED AND REVISED.
C. INSTALL NEW ELECTRICAL EQUIPMENT 6-FT. BEHIND TBC UNLESS OTHERWISE INDICATED OR APPROVED; INSTALL TOP OF GROUND SLEEVE 6-INCHES ABOVE ADJACENT TBC GRADE PER CURRENT SGES STANDARDS.
D. CONTRACTOR SHALL HAVE ADJACENT CURB LOCATION AND ELEVATION STAKED PRIOR TO PLACEMENT OF ELECTRICAL EQUIPMENT.
E. COORDINATE WITH SGES DEPARTMENT INSPECTOR FOR PHASE SEQUENCE NUMBERS AND TAPING INFORMATION TO BE LABELED ON NEW OR REPLACED TRANSFORMERS, AND PULLED OR RE-PULLED WIRE.
F. PRIMARY AND SECONDARY POWER CONDUITS SHALL BE STUBBED INTO SECONDARY BOXES BETWEEN CONSTRUCTION PHASES AS NECESSARY – TYPICAL.
G. METER, MAIN PANEL, AND DISCONNECTS SHALL BE MOUNTED OUTSIDE OF THE BUILDING ON AN EXTERIOR WALL IN A LOCATION THAT IS VISIBLE AND ACCESSIBLE TO THE POWER DEPARTMENT AND PUBLIC SAFETY ENTITIES. MAIN SHALL BE LOCATED ON THE SIDE OF THE BUILDING CLOSEST TO THE ELECTRICAL SOURCE/SECONDARY BOX.

H. EASEMENTS ARE REQUIRED FOR ALL ELECTRICAL EQUIPMENT, CONDUIT, AND WIRE TO POINT OF SERVICE.
I. PRIVATE STREET LIGHTS AND IRRIGATION CONTROLS, IF APPLICABLE, SHALL BE POWERED FROM BUILDING ELECTRICAL PANELS OR COMMON HOA METERS.

## POWER PROJECT NOTES (COMMERCIAL)

A. CONTRACTOR SHALL HAVE ADJACENT TBC LOCATION AND ELEVATION, AND ANY OTHER APPLICABLE IMPROVEMENTS, STAKED PRIOR TO PLACEMENT OF ELECTRICAL EQUIPMENT.
B. INSTALL NEW ELECTRICAL EQUIPMENT 6-FT. MIN. BEHIND TBC UNLESS OTHERWISE NOTED; INSTALL TOP OF GROUND SLEEVE 6-INCHES ABOVE ADJACENT TBC GRADE PER CURRENT SGES STANDARDS.
C. COORDINATE WITH SGES DEPARTMENT INSPECTOR FOR PHASE SEQUENCE NUMBERS AND TAPING INFORMATION TO BE LABELED ON NEW OR REPLACED TRANSFORMERS, AND PULLED OR RE-PULLED WIRE.
D. ELECTRICAL ENGINEER SHALL PROVIDE AIC AND COMPLETE ALL NECESSARY CALCULATIONS IN ACCORDANCE TO CURRENT BUILDING CODES; INFORMATION TO BE INCLUDED WITH BUILDING PLANS. SGES WILL PROVIDE EXISTING EQUIPMENT INFORMATION AS NECESSARY.
E. METERS AND MAIN PANELS WITH DISCONNECTS SHALL BE MOUNTED OUTSIDE ON AN EXTERIOR BLDG. WALL, LOCATED TO BE VISIBLE & ACCESSIBLE TO THE POWER DEPARTMENT AND PUBLIC SAFETY ENTITIES.
F. EASEMENTS ARE REQUIRED FOR ALL ELECTRICAL EQUIPMENT, CONDUIT, AND WIRE TO POINT OF SERVICE.
G. METER BASES SHALL CONFORM TO A 5-JAW 12-S TYPE METER FOR SINGLE PHASE SERVICES BEING FED FROM A 3-PHASE TRANSFORMER.

# CABLE INSTALLATION

## SCOPE

This standard outlines installation details for primary and secondary cable used in underground distribution.

## DEFINITIONS

### SECONDARY CABLES

All cables with voltage ratings of 600 volts or less.

### PRIMARY CABLES

All cables with voltage rates greater than 600 volts.

## LOADING GUIDELINES

### PRIMARY CONDUCTOR LOADING

A #1/0 aluminum conductor with full ampacity neutral cable is required where the connected single-phase and/or three-phase load is greater than 300 kVA but less than 600 kVA per cable.

Where the connected single-phase and three-phase loads exceed 600 kVA per cable a backbone-feeder system should be used. It is required that a 750 aluminum conductor with 1/3 ampacity neutral cable be used for the backbone. The connected load shall be divided so that it can be fed by #1/0 feeders. These feeders will tap off the backbone in a 200 amp rated fused device. There will be no unfused taps off the backbone system unless approved by Energy Services.

### SECONDARY CONDUCTOR LOADING

Refer to the 2014 National Electrical Code, Table 310.15(B)(16).

## LOOPING GUIDELINES

The feeder circuits for a residential area will include a distribution loop when the connected load exceeds 115 kVA for the entire development as described. As indicated in the loading guidelines listed above: For each #1/0 cable as described, loads will not exceed 600 connected kVA per leg or 1200 connected kVA for the loop.

In projects that are to be constructed in phases, a loop feed distribution system will be established using the load limits defined in above paragraph. These limits shall be met in areas where there may be a delay in development of subsequent phases. Projects constructed in phases shall have a loop system and the loop will be completed prior to receiving permanent power.

The Energy Services Department shall install all primary fusing and equipment grounding. Ground rods shall be provided by the contractor.

For all normal open points of a loop system, arrestor elbows will be required to be installed.

## CABLES IN CONDUIT

### MISCELLANEOUS INSTALLATION INSTRUCTIONS

Whenever possible, all conduit and bends will be installed and backfilled before any wire is pulled. This will result in minimum tension on the cables.

On long pulls, the pullout vault will be rigged whenever possible, to accommodate an adequate amount of cable for splicing and racking.

In highly congested basements/vaults or where cables must be bent sharply to permit pulling, a feed-in tube shall be used for pulling cables. This will reduce pulling tensions and prevent damage to the cables being pulled and to other adjacent cables.

Single conductor cables must be installed one cable per conduit and conduit must be nonmetallic as per requirements.

Before making a pull, conduits shall be cleared and free of dirt, rocks, etc.

Wire rope shall be used to pull cables in nonmetallic conduits when pre approved by Energy Services.

For pulling primary or secondary conductor in conduit, 3-M Poly water, or an Energy Services approved, clear non-staining lube shall be used. Energy Services will require pulling lube on any installations, including any length, and all conductor types and sizes.

When two or more cables (secondary) are pulled into one conduit, they shall be pulled at the same time.

Primary cables shall not be installed in the same conduit with secondary or communication cables unless approved by Energy Services.

Primary or secondary cables shall not be pulled into plastic conduit until all conduit joints made using plastic conduit cement have been allowed to dry for at least one half hour.

After cable has been pulled into conduit, remove pulling eye and cut a minimum of five feet off cable before terminations are made.

After the cable has been pulled through the conduit and cut, the cable ends will be sealed with a heat shrink. Conduit shall be sealed with styrofoam, duct seal or heat shrink and properly tagged and phase taped.

## MAXIMUM SAFE WORK LOADS FOR PULLING LINES

An approved hydraulic pressure cable tension monitoring system or a dynometer will be used on all pulls where the conductor wire cannot be pulled by hand.

## PULLING EYES AND GRIPS

Cables shall be pulled into conduit with a pulling eye attached to the cable conductor or a pulling grip placed over the cable sheath, insulation or jacket.

## MAXIMUM PULLING LINE TENSIONS

### Straight Pulls

When primary or secondary cables are pulled into straight conduit runs, the pulling line tension shall not exceed the values shown in Tables 1 and 2.

### Pulls with Bends and/or Sweeps

When primary or secondary cables are pulled into conduit runs including bends or sweeps, the maximum pulling line tension shall not exceed that value determined by calculation.

**Table 1**
**MAXIMUM ALLOWABLE PULLING LINE TENSIONS**
15kVPRIMARY CABLES

| CONDUCTOR SIZE AND TYPE | PULLING EYE POUNDS | PSI |
|---|---|---|
| #1/0 AWG AL | 895 | 2,100 |
| #750 kcmil AL | 6,000 | 5,150 |

**Table 2**
**MAXIMUM ALLOWABLE PULLING LINE TENSIONS**
**600 VOLT, SECONDARY CABLES**

| | 1 CABLE / CONDUIT | | 3 CABLES / CONDUIT | |
|---|---|---|---|---|
| **CONDUCTOR SIZE & TYPE CONDUIT** | **PULLING EYE** | **PULLING GRIP** | **PULLING EYE** | **PULLING GRIP** |
| #2 AWG AL | 300 | 300 | 800 | 800 |
| 1/0 AWG AL | 450 | 450 | 1,270 | 1,270 |
| 1/0 AWG CU | 575 | 575 | 1,690 | 1,690 |
| 2/0 AWG CU | 750 | 650 | 2,130 | 2,000 |
| 4/0 AWG CU | 800 | 650 | 2,440 | 2,000 |
| 4/0 AWG AL | 1,150 | 650 | 3,400 | 2,000 |
| 250 kcmil CU | 1,350 | 650 | 4,000 | 2,000 |
| 350 kcmil AL | 1,400 | 650 | 4,200 | 2,000 |
| 500 kcmil AL | 2,000 | 650 | 6,000 | 2,000 |
| 500 kcmil CU | 2,675 | 650 | 8,000 | 2,000 |
| 750 kcmil AL | 3,000 | 650 | 9,000 | 2,000 |

## BENDING RADII FOR PRIMARY CABLES

The minimum bending radii for both single and multiple primary conductor cables are as shown in Table 3.

**Table 3**
**MINIMUM BENDING RADIUS**
**AS A MULTIPLE OF CABLE DIAMETER**
**OVERALL DIAMETER OF CABLE, INCHES**

| 1” and Less | 1” to 2” | 2” and over |
|---|---|---|
| 12 - 15 X Diameter | 15 X Diameter | 15 X Diameter |

## ENERGIZED EQUIPMENT

Because of liability and safety reasons, it is required that Energy Services employees be on site for any wire pulls into energized equipment, including secondary boxes. A 48 hour notice will be required. All work performed will be billed to the Contractor at the current SGESD hourly rate. Note: This work shall consist of all labor, materials and equipment necessary to pull wire into energized equipment including grounding, proof testing and energizing the equipment. The billing will not include service connections\meter installations.

After a line or equipment has been energized and a failure occurs on the line or equipment during the contractor's one year warranty period, the City will repair the failure and bill the responsible contractor for the time and material.

Until the equipment is energized, the Contractor is responsible for all electrical equipment and materials (i.e. conduit, wire, switches, etc.).

In addition, blue stakes will be the responsibility of the Contractor until the equipment is energized.

# CABLE CAPS

## SCOPE

This standard details requirement applicable to cable end caps used to seal the ends of primary and secondary cables.

## GENERAL

### TEMPORARY CAPS

Cable end caps are available for temporarily sealing the ends of primary and/or secondary cables during the period of time between installation of the cables and completion of splices or terminations and during yard storage. In no case shall the cables be left uncapped or unprotected.

### PERMANENT CAPS

When the ends of primary and/or secondary cables are to be capped and then buried, left in a vault or switchgear, etc., for future use they must be capped with cable end caps.

## INSTALLATION

### PERMANENT CAPS

- Cut the end of the cable to be capped off to the desired length (square cut).
- Determine the appropriate cable end cap for primary and secondary cable.
- Slip the cable end cap over the cable end.
- Heat the cable end cap thereby causing it to shrink in diameter and conform to the cable end. This will totally seal the cable end against environmental conditions.

Note: Mastic or 3M 130C rubber tape may be used as alternative to caps.

# CABLE MARKING AND LOCATION

## SCOPE

This specification details the standard method to be used for marking primary and secondary underground cables to indicate the general direction from which each cable extends from a given site.

## DEFINITIONS

### PRIMARY CABLES

All cables with voltage rates greater than 600 volts.

### SECONDARY CABLES

All cables with voltage rates of 600 volts or less including ground grid conductors.

## INSTALLATION

### CABLE AND DIRECTION IDENTIFICATION (TAGGING)

Primary and secondary cables shall be marked with tag indicating direction, lot number, address, transformer number, etc. from underground facilities (i.e., vaults, primary junction boxes, service holes, manholes, secondary junction boxes, transformers, or splice boxes). This tag shall indicate to the next facility or point of connection where the cable is located. Energy Services must approve the tags used.

All conductors shall be tagged immediately after pulling, also color code conductors before pulling.

All equipment will be numbered as per detail D19 prior to tagging the cable in order to be accurate. Energy Services, prior to energizing, will inspect the tagging.

NOTE: Approved tags can be purchased at selected local suppliers (cow tags) and attached with black zip ties and labeled on both sides of the tag with black permanent marker.

When individual phases in a primary or secondary multi-cable installation are to be identified, bands of colored tape shall be used. Each 15 kV conductor shall be identified with bands of black for “A” phase, bands of red for “B” phase and bands of blue for “C” phase.

### SAFETY

Always follow safe working practices and procedures and wear personal safety equipment. Regardless of the accuracy of cable labeling, it cannot be relied upon when working and handling cables. The energized status of any individual cable must be tested by approved methods. Proper cable grounding procedures shall be followed. When unsure, stop and ask questions.

# CONDUIT INSTALLATION

## SCOPE

This standard outlines installation details for plastic (Type PVC Schedule 40), used in underground distribution.

## DEFINITIONS

## PLASTIC CONDUIT

PVC conduit shall be schedule 40. ARNCO or Carlon continuous conduit will be allowed on the system. Use grey schedule 40 with ARNCO Sure Lock Couplers or other pre approved fittings.

### BURIAL DEPTH

#### Conduit

Vertical distance from the finished grade to the top of the conduit nearest the surface.

#### Concrete Encased Conduit

Vertical distance from the finished grade to the top of the concrete envelope surrounding the conduits.

### SWEEP

Change in direction of a conduit or group of conduits with an angle of bend of 10 degrees or radius of bend of 15’ or more.

### BEND

Change in direction of a conduit or group of conduits that, due to the angle of bend or radius of bend, cannot be defined as a sweep.

### APPLICATION

A red 6” warning tape shall be installed 12” below finished grade for the length of the entire trench for all primary and secondary conduits.

**Table 4**
**CONDUIT SIZES FOR SECONDARY CABLES**
**3 or 4 Conductors**

| CONDUCTOR SIZE AWG OR kcmil | SCHEDULE 40 CONDUIT |
|---|---|
| All Streetlight Circuits | 2” |
| #2 | 2” |
| #1/0 | 2” |
| #4/0 | 2” |
| #4/0 quad | 3” |
| 350 | 3” |
| 500 | 3” |
| 350 or 500 quad | 4” |

**Table 5**
**CONDUIT SIZES FOR PRIMARY CABLES**
**Only one conductor per conduit shall be allowed**

| CONDUCTOR SIZE AWG OR kcmil | SCHEDULE 40 CONDUIT |
|---|---|
| #1/0 | 3” |
| 750 kcmil | 3” |

# INSTALLATION

## BURIAL DEPTH

The minimum allowable burial depths for conduit are to be 42” for 15 kV primary conductors and 32” for 600 volt secondary conductors. See details D13, D14 and D15. Refer to Standard Specifications for design and construction. When depth cannot be reached, all conduits shall be encased in concrete envelope at a minimum depth of 18 inches and must be approved by Energy Services.

## TRENCHES FOR CONDUITS

### Trench Backfill

#### Plastic Conduit

At least 12” of 1” minus material shall be places around the conduits. The remaining backfill shall be soil removed from the trench unless specific backfill requirements exist.

#### Concrete Encased Conduit

The material used to backfill trenches containing concrete encased conduits shall be soil removed from the trench unless specific backfill requirements exist.

### Clearances to Other Underground Utilities

| | |
|---|---|
| Water | 5’ horizontal |
| Sewer | 5’ horizontal |
| Natural Gas | 10’ horizontal |
| Cable TV | 1’ horizontal, 6” vertical above secondary |
| Phone | 1’ horizontal, 6” vertical above secondary |
| Communication | 1’ horizontal, 6” vertical above secondary |

### SOIL COMPACTION

All backfill placed over plastic conduit must be compacted per the Standard Specifications for Design and Construction for the City of St. George.

# CONDUIT SWEEPS

Use 36” radius schedule 40 sweeps (2” and 3”) for all primary installations only.

- Encase all 3” sweeps in concrete.
- Sweeps shall be factory made unless authorized by Energy Services.
- All metal sweeps shall be wrapped with a moisture barrier tape.

Sweeps entering ground sleeves shall be constructed with 45° or 90° sweeps. This change is made in order to allow more cable distance between the connection elbow and the conduit. See details D2 and D4.

90° sweeps will not be used for 600 amp equipment ground sleeves unless approved by Energy Services. The straight conduit will run directly into the 600 amp ground sleeve with no upward bend. The cable will be pulled into the ground sleeve and trained up to the equipment connections.

## SHORING, LAYING BACK, SOIL PLACEMENT AND RETENTION

When employees must enter a trench to install conduits, the trench shall be shored or laid back and the spoil shall be effectively retained and placed back from the edges of the trench as required by local, state and national codes or ordinances to ensure that the employees are not subject to moving ground or cave-ins.

## CONDUIT REPAIR

When conduit is damaged due to construction or excavation, a full stock length (usually 10’ segments) will be used to repair damaged section or repair collars will be allowed with an approved snap together repair system. All repairs will be inspected by Energy Services.

# POLE RISER CONDUIT

## Primary or Secondary Riser

Fiberglass or Aluminum conduit shall be used on all conduit risers. The transition to PVC conduit is to take place underground with a minimum 6” below final grade with appropriate fiberglass/aluminum to PVC adaptor. Acceptable manufacturers are Champion & Carlon for the fiberglass conduit, elbows and fittings. If aluminum conduit is installed below grade, the conduit shall be wrapped with protective vinyl tape.

The riser pole conduit shall be straight and supported with a unistrut system. Any crooked or misaligned conduits will not be accepted. Standoff brackets, two each on first length or riser pipe, 1’ from grade and 1’ from top of first 10’ length of pipe, thereafter one every 10’ length.

All new risers shall be built on a 6” standoff bracket with double sided unistrut, with 1” channel.

a. 3 phase 3” risers, 16” unistrut

Note: Riser installation above 10 feet will be installed by Energy Services.

## CONCRETE ENCASEMENT

Encase conduit in concrete when not installed at minimum depth and for all 3” primary sweeps. **Energy Services shall approve all encasements when minimum depth cannot be obtained.**

# EQUIPMENT LOCATION AND RIGHT OF WAY REQUIREMENTS

## SCOPE

This standard outlines the location, with respect to property lines, of underground distribution facilities. See location drawings contained in these specifications.

## BACK LOT LINE INSTALLATION

Installation along back lot lines will not be allowed unless approved by St. George Energy Services.

## RIGHT OF WAY REQUIREMENTS

Before any power system design approval, the property owner or developer will be required to grant the City of St. George the proper easement and right-of-way at no cost to the City. Additional easements may be required for equipment access.

The standard requirements are as follows:

### Residential

10’ on the front of each lot or parcel
7.5’ on the side and back of each lot or parcel

### Multi Building or Condominium

10’ around perimeter of each phase of project.

### Commercial

15’ on the front of each lot or parcel
7.5’ on the side and back of each lot or parcel
(See location drawings contained in these specifications.)

### Common Areas

The equipment (i.e., transformers, vaults, and switches) will be placed along access roads as per standards. If placement along access roads cannot be accomplished as determined by St. George Energy Services, equipment will be placed with at least 10’ of clearance from any permanent structure.

All power equipment will be designed and installed as per the location drawings contained in these specifications in order to assure equipment falls within the established right of way and easement and to maintain consistency of equipment placement throughout the City.

The SGES may require the installation of bollards around electrical equipment (i.e., transformers, vaults, and switches) located in areas that may need to be protected from vehicular traffic.

## PADMOUNT EQUIPMENT CLEARANCES

Padmount equipment shall conform to the following:

**A.** All padmount equipment (including transformers and switchgear) is not to be installed directly in front of doors, stairways, underneath windows, or in any area where they can possibly obstruct the vision of vehicular traffic. The front doors of all padmount equipment shall open away from any structure.

**B.** All padmount equipment shall conform to the following minimum distances from buildings and building openings.

| Type of Construction | Front Clearance (ft.) | Side Clearance (ft.) | Height Clearance (ft.) |
|---|---|---|---|
| Non-combustible walls (concrete, block, brick)* | 10 | 3 | |
| Combustible walls including eaves | 10 | 10 | |
| Doors | 10 (1-ph)<br>20 (3-ph) | 10 | |
| Windows | 10 | 3 | 10 |
| Air Vents | 20 | 10 | 25 |
| Gas service meter relief vents | 3 | 3 | 3 |
| Fire sprinkler values, standpipes, and fire hydrants | 6 | 6 | 6 |
| The water's edge of any body of water | 15 | 15 | 15 |

*A clear 10 feet area must be provided in front of equipment doors to allow personnel access for safe operation and maintenance of the equipment.
(1) Clearances between padmount equipment and structures must be measured from the closest metal portion of the equipment nearest to the structure (including overhangs)
(2) Consult local building and fire codes for more detailed customer information

**C.** A right-of-way of 12’ minimum shall be available at all times to provide access for any City of St. George maintenance equipment.

**D.** All padmount equipment will be installed in non-traffic areas if possible. Any equipment that is exposed to traffic is required to have additional protection installed – barriers, bollards, or curbs. A curb must have a minimum height of 6” and be at least 6” thick and its front face located 54” minimum from the equipment foundation (pad).

**E.** Three phase transformers that are screened by a wall or fence shall meet the following requirements.

1. Vehicular access to transformer shall be provided.
2. Block wall or fence maximum height shall be 6’ high.

# PRIMARY EQUIPMENT INSTALLATION

## SCOPE

This standard outlines installation details applicable to fused and unfused 15 kV, 200 and 600 Ampere Primary Equipment Installation locations. A primary equipment installation is any location where 15 kV cable connections are made.

## INSTALLATION

### TRANSFORMER GROUND SLEEVES

All single-phase pad mount transformers that are placed as loop feed or may at some time need to change phase wire or otherwise make wire location movement within the transformer compartment will have a ground sleeve. All three-phase transformers will be placed on the transformer pad.

The approved ground sleeves are Nordic BP 424832, Electomold EFBT-424832-2224-406, Associate BP-424832 - SCC and Hubbell BB-424832-2224-C2B. Details are in the drawing section.

### PRIMARY JUNCTION VAULT (PJV)

Primary junction vaults (PJV) may be used for locations where primary fusing is not required. PJV's will use 200 A load break elbows and junctions. Stingerless DR caps shall be used on all open points and parking bushings. Crimping tools used on the SGES system shall be approved by the Energy Services department prior to use. See detail D4. For equipment requirements, see Primary Junction Vault specifications section.

### PADMOUNT SWITCHGEAR (PMS)

For all 600 amp locations a concrete basement will be installed under the padmount switchgear equipment (PMS). The padmount switchgear shall have both 600 A switch bays and 200 A fuse bays. The final configuration will be determined by system requirements. See detail D3.

### SECTIONALIZING/FUSING REQUIREMENTS

Fusing requirements for any industrial/commercial facility will be reviewed, coordinated and approved by the City Energy Services Department.

Padmount switchgear generally will be required for any tap off of the City's main distribution system that has the potential of serving more than one commercial/industrial location or more than one circuit/feeder.

For locations with a total connected kVA load of 750 kVA or less, up to three customer locations may be fed from a single PJV. Where the connected load exceeds 750 kVA or where there are more than three customer locations each transformer and/or circuit feeder must be protected by a set of fuses (i.e. padmount switchgear or individual riser)

The Energy Services Department will determine fusing requirements and each subdivision or development will be fused according to the needs.

The first commercial/industrial developer that requests power service into a new development which has the potential for more than one location or circuit/feeder will install padmount switchgear or primary junction vault equipment and then upon energizing this equipment will become the property of St. George City.

The padmount switchgear will be furnished by the Energy Services Department. The number of fused bays used will be billed to the developer. The concrete basement for the padmount switchgear will be supplied by the developer. See detail D3.

Fusing requirements for any commercial/industrial installation, subdivision or residential development will be reviewed, coordinated and approved by the Energy Services Department.

As a general guideline, the first tap of the City's distribution for a subdivision/residential development will not require a PJV if the total connected load is less than 300 kVA and provided there is an overhead feeder connection available. If the first tap is for a load greater than 300 kVA or an overhead connect is not available, a PJV must be installed and paid for by the development. Any development requiring service off an existing underground system must install and pay for padmount switchgear or PJV equipment if the additional load causes the total load to exceed 300 kVA. These guidelines will also apply to single-phase industrial/commercial facility development.

## TESTING BEFORE ENERGIZING

### LOADBREAK ELBOWS AND INSULATING RECEPTACLES

Primary Junction Installations, which include load break elbows and/or insulting receptacles, shall be operated before the installation is energized to ensure that there is no interference from concentric neutral conductors, adjacent elbows, etc. Test operations shall be performed on all elbow connected equipment. The primary cables must be able to be moved to an adjacent phase position.

### SWITCHES

Test operate all switches in padmount switchgear to ensure that adjacent obstacles such as fences, walls, etc., do not interfere with the switch operating handle. Test operation shall also include all fused positions.

### LOCATION

Primary Junction Installations shall be located such that adjacent obstacles such as fences, buildings, etc., do not interfere with operation, installation and maintenance of the installation.

# SECONDARY JUNCTION INSTALLATION

## SCOPE

This standard describes the installation secondary junction boxes and mobile home park meter pedestals.

## INSTALLATION

### STREETLIGHT JUNCTION BOXES

All street lights shall have the approved street light junction box installed at the base of each street light pole. Conduits are to be run from junction box to junction box. See streetlight installation section on page 43.

### BURIAL DEPTHS

#### Secondary Junction Boxes

The top of the secondary junction boxes shall be installed with 6” above top back of curb (TBC) or final grade.

#### Mobile Home Park Metering Pedestals

Mobile home park metering pedestals shall be installed to the depth indicated on the pedestal. See detail D6. Sidewalk or concrete installation shall be approved by Energy Services.

## SAFETY

### LOCKING

#### Secondary Junction Boxes

All secondary junction boxes shall be secured with pedestal equipment locks. Standard tumbler-type locks or other devices are not approved for this application.

#### Mobile Home Park Meter Pedestals

The access panel to the un-metered bus in all mobile home park meter pedestals shall be locked with pedestal equipment locks or meter seals.

## MATERIAL

#### Secondary Junction boxes

The St. George Energy Services approved secondary junction boxes will be used for all installation. For all secondary wire, use Nordic PSPX2-101830-MG secondary box with pedestal assembly. Street light secondary boxes shall be Carson #1419-12-4B box and lid.

## Squids

| | |
|---|---|
| Tyco 350 kcmil 4 point clear top | # GPRT-350-4P-C |
| Tyco 350 kcmil 6 point clear top | # GPRT-350-6P-C |
| Tyco 500 kcmil 4 point clear top | # GPRT-500-4P-C |
| Tyco 500 kcmil 6 point clear top | # GPRT-500-6P-C |

# CABLE SPLICES

## SCOPE

This standard outlines installation details for primary and secondary cable splices used in underground distribution. The splicing of cable on the St. George system is to be completed by Energy Services Department personnel only, unless approved by Energy Services.

No primary cable splices will be allowed unless in the event of an emergency. Splices shall never be considered as a design option. For 750 kcmil cable, terminations in ground vaults will be made with Raychem or 3M manufactured splice kits.

# CABLE TERMINATIONS (200 AMPS/600 AMPS)

## SCOPE

This standard outlines installation details for 200 amp / 600 amp 15 kV loadbreak junctions and cable terminations used in underground distribution.

## INSTALLATION

### GENERAL

200 amp, 15 kV loadbreak junctions must be installed in primary enclosures. They are not suitable for direct burial.

All elbows and terminations will be supplied from one of the following manufacturers and will meet the current City standard.

- Elastimold 200 Amp elbow kits with test points will be allowed.
- 1/0 elbow 166LRJS-B-5240 with 3M cold shrink #8452 seal kit.
  1/0 elbow 166LR-B-5240 with built in seal kit.
- 3M Term Kit #2-4/0-3M7642-S-4.
- 3M Term Kit 500-1000 kcmil-3M-7655-S-4.
- Raychem Elbow ELB-15-210-ES

All silicon used during elbow and termination installation will be supplied from one of the following manufactures and will match the stock numbers: (use silicon supplied in kits)

- Elastimold (#5SL)
- Dowell Corning (Manufacturer's Pack)

Other silicon brands used will not be accepted and will be rejected upon inspection. All cable cleaners used will be made of a non-chlorinated, non-carcinogen, non-flammable, non-conductive, fast evaporating spray.

## TESTING BEFORE ENERGIZING

Operate loadbreak elbows and insulating receptacles before energizing to ensure that:

They can be operated without interference from concentric neutral conductors, adjacent elbows, etc.

The mounting location of the loadbreak junction is such that covers or doors of primary enclosures, adjacent junctions, etc., do not interfere with their operation and all conduit is sealed and legible tagging is complete and facing to the outside.

They will be either high pot tested or fault tested with the phasing set by Energy Services, before energizing.

# TRANSFORMER SPECIFICATION AND INSTALLATION

## SCOPE

This standard describes the installation of single-phase and three-phase transformers used in underground distribution.

## EQUIPMENT

Transformers shall meet all City specifications.

## INSTALLATION

See details D1 and D2 for proper pad or sleeve installation. The soil backfill that is placed around the transformer pad or ground sleeve shall be compacted to within 90% of the maximum dry density to support the transformer. The transformer shall be less than 1-1/2% out of level.

The pre-qualified contractor shall furnish all necessary primary and secondary connectors and install load break elbows on all primary connections. Arrester elbows will be required for any radial feed installations. Stingerless DR caps shall be used on all primary open points. (Acceptable manufactures are Cooper and Elastimold) Tank ground lugs, ground rods and clamps shall be provided by the contractor. Crimping tools used on the SGES system shall be pre-approved by the Energy Services Department prior to use on the system. All elbows, stand offs, stingerless dummy receptacles, etc. will be installed prior to energizing the transformer.

**Grounding of equipment will be completed by the Energy Services Department employees, not pre-qualified contractors.**

## TRANSFORMER SIZING

Transformer sizing will be determined by Energy Services Department.

## TRANSFORMER POLICY

It is required for all contractors to purchase 1- and 3-phase transformers from other sources provided they fully meet all specifications required by the Energy Services Department.

Certified, load loss certificates, by serial number of unit.
Certificate from manufacturer:

- Complete transformers test results including load and loss values
- Warranty
- P.C.B. certificate

- Transformer outline drawing
- Name plate

## TRANSFORMERS FOR TEMPORARY POWER

If permanent power is not available to the project for construction purposes, it shall be the Contractors responsibility to supply the needed power source for construction.

# SINGLE PHASE PADMOUNTED DISTRIBUTION TRANSFORMER SPECIFICATION

## 167 kVA AND SMALLER

## SCOPE

### GENERAL

This specification outlines the electrical characteristics and the mechanical features of single-phase, 60 Hz, oil filled padmounted, and compartmental-type distribution transformers with separable insulated high voltage connectors.

### STANDARDS

All transformers shall be constructed and tested in accordance with the latest revision of ANSI C57.12.25, the applicable NEMA standards, and all DOE efficiency standards. No used or reworked material will be acceptable in these standards.

## RATINGS

### KILOVOLT AMPERE

All standard kVA ratings are continuous and based on not exceeding either a 65° C average winding temperature rise or an 80° C hot spot temperature rise. The temperature rise of the insulating oil shall not exceed 65° C when measured near the top of the tank.

### VOLTAGE

The high voltage rating shall be 13,200 Grd. Y/7,620 volts. The low voltage rating shall be 240/120 volts unless otherwise directed by the City.

### TAPS

The transformers shall be equipped with no taps.

### BASIC IMPULSE INSULATION LEVEL

The HV basic impulse insulation level (BIL) shall be 95 kV.

## CONSTRUCTION

### GENERAL

All transformers shall consist of a tank and a high- and low-voltage cable termination compartment. These components shall be assembled as an integral, tamperproof and weatherproof unit for mounting on a pad. The transformers shall meet the requirements for tamper resistance as set forth by the Western Underground Committee. There shall be no exposed bolts, screws or other fastening devices, which are externally removable. There

shall be no openings through which foreign objects such as wires or rods might be inserted to contact live parts.

The bottom one and one half (1-1/2) inches minimum of the rim, tank, supports, and enclosure of the padmounted transformer shall be constructed of 304 stainless steel.

## HIGH- AND LOW-VOLTAGE COMPARTMENTS

Access to the high- and low-voltage compartment shall be through a hinged door suitable for locking with a padlock.

The high-voltage segment of the compartment shall contain the high voltage terminations, be provided with a cable accessory parking stand. High voltage will be of loop-type configuration.

A high-voltage off/on operating switch shall be located in the high-voltage compartment.

The low-voltage segment of the compartment shall contain the low-voltage terminations.

## TANK

All transformer tanks shall have sealed tank construction and sufficient strength to withstand a pressure of 7 PSI gage without permanent distortion.

A tank that has sealed tank construction is one that seals the tank from the atmosphere.

The tank shall remain effectively sealed for a top oil temperature range of -5° C to 105° C.

## LOW-VOLTAGE TERMINATIONS

The electrical characteristics of the completely assembled low-voltage terminations shall be:

- Insulation Class - 1.2 kV
- BIL - 30 kV
- One minute withstand - 10 kV

The terminals of the low-voltage terminations shall be as shown in Figure 4C of American National Standards Publication C57.12.25 – Latest revision.

The number location and arrangement of the low-voltage terminations shall be as shown in Figure 2 of American National Standards Publication C57.12.25 – Latest revision.

Two hole cable terminations or transformer connectors shall be used to terminate secondary cables to transformer spades. Transformer connectors (CMC/ESP Utility Products Type ABV-M or approved equal) may be used to adapt the spade termination to multiple set

screws for cable termination. Chair lugs will NOT be allowed for secondary termination at transformers. All bolts & hardware are to be of the proper type and size to match transformer spades.

All low-voltage terminations shall be externally bolted to facilitate field replacement.

## HIGH-VOLTAGE TERMINATIONS

All high-voltage terminations shall be 15 kV class bushings or wells and inserts suitable for use with 15 kV class load break elbow connectors, respectively.

All high-voltage terminations shall be externally bolted to facilitate field replacement.

The number location and arrangement of the high-voltage terminations shall be as shown in Figure 2 of American National Standards Publication C57.12.25 – Latest revision.

## NEUTRAL CONNECTIONS

The $H_o$ end of the high-voltage winding shall be connected to the transformer tank internally and this connection shall be securely grounded to the tank and shall be independent of all other connections.

The low-voltage neutral shall be either a blade connected directly to the tank, or a fully insulated bushing. If a bushing is used, a ground pad shall be provided on the outer surface of the tank. A removable ground strap shall be provided and connected between the low-voltage neutral bushing and the ground pad.

## INSULATION

All insulating paper used as layer insulation in transformer coils shall be coated on both sides with a thermosetting adhesive and properly cured prior to impregnating with oil, or the coils shall be wound with primary conductor containing thermosetting adhesive that when properly cured will form an effective bond.

## ACCESSORY EQUIPMENT

### HIGH-VOLTAGE PROTECTIVE FUSES

All transformers shall be equipped with an externally removable, oil immersed, expulsion fuse, in a load break, bayonet suitable for hot stick operation. This fuse shall be in series with an under oil partial range current limiting fuse. The fuses shall be coordinated to ensure that the current limiting fuse will only operate on faults internal to the transformer. The current limiting fuse used shall have an interrupting rating of 50,000 amperes (minimum) symmetrical.

A high-voltage off/on operating switch shall be located in the high voltage compartment in series with the current-limiting fuse before the high voltage coil.

## PRESSURE RELIEF DEVICE

Each transformer shall be equipped with a self-actuating pressure relief device slow pressure build-up and to automatically vent when pressure reaches ± 10 PSIG and recloses when pressure falls to ± 6 PSI.

## LIFTING AND MOUNTING FACILITIES

The transformer shall be equipped with lifting provisions of adequate strength and size and arranged on the transformer to permit lifting of the completely assembled unit.

An internal flange shall be provided at the base of the high- and low-voltage compartment to provide means of mounting the transformer on a pad.

## INSTRUCTIONAL NAMEPLATE

An instructional nameplate shall be located in the low-voltage segment of the high and low voltage compartment and shall be readable with cables in place.

If the nameplate is mounted on a removable part, the manufacturer's name and the transformer serial number shall be permanently affixed to a nonremovable part.

The instructional nameplate shall conform to Section 9.4 of American National Standard Publication C57.12.00, latest revision.

# TESTING

All transformers shall be tested in accordance with the requirements of American National Standard Publication C57.12.25, latest revision. All transformers shall be capable of withstanding short-circuit testing.

# FINISH

The transformer shall be given a durable, corrosion resistant green or desert tan outdoor finish capable of meeting or exceeding EEI finishing requirements.

All transformer surfaces in contact with the pad shall be designed or treated to minimize corrosion.

# LOSS EVALUATION

All transformer losses must meet the latest DOE efficiency standards.

All actual tested loss data will be transmitted to the City of St. George Energy Services Dept.

## WARRANTY

Manufacturer shall warrant that the apparatus or services to be furnished hereunder shall be of the highest quality and free from defects in material, workmanship, and title and will be of the kind designated in the pertinent purchase order. The Manufacturer's warranty shall be effective for a period of twelve (12) months after the date becoming energized.

# THREE PHASE PADMOUNTED DISTRIBUTION TRANSFORMER SPECIFICATION

# 3000 kVA AND SMALLER

## SCOPE

### General

This specification outlines the electrical characteristics and the mechanical features of three-phase, 60 Hz, oil immersed, dead front, loop feed, self-cooled padmounted, tamperproof, weatherproof, and compartmental-type distribution transformers with separable insulated high voltage connectors.

### Standards

All transformers shall be constructed and tested in accordance with the latest revision of ANSI C57.12.26, the applicable NEMA standards, and all DOE efficiency standards. No used, reworked or remanufactured material will be accepted.

## RATINGS

### Voltage and Kilovolt-Ampere Ratings

All standard kVA ratings are continuous and based on not exceeding either a 65° C average winding temperature rise or an 80° C hot spot temperature rise. The temperature rise of the insulting oil shall not exceed 65° C when measured near the top of the tank.

### Voltage

The high-voltage rating shall be 13,200 GrdY/7,620 volts. The low voltage rating shall be 208Y/120 or 480Y/277 volts unless otherwise directed by the City.

### Tap Ratings

The transformers shall be equipped with two (2) 2.5 percent taps above and two (2) 2.5 percent taps below normal voltage. All taps shall be full capacity taps.

### Basic Impulse Insulation Level

The HV basic impulse insulation level (BIL) shall be 95 kV.

## CONSTRUCTION

### General

All transformers shall consist of a transformer tank and a high-and low-voltage cable termination compartment. These components shall be assembled as an integral, tamperproof and weatherproof unit for mounting on a pad. The transformer shall

meet the requirements for tamper resistance as set forth by the Western Underground Committee. There shall be no exposed bolts, screws or other fastening devices, which are externally removable. There shall be no openings through which foreign objects such as wires or rods might be inserted to contact live parts.

## High- and Low-Voltage Compartments

The high- and low-voltage cable terminating compartment shall:

Be compartmentalized into high-voltage and low-voltage segments by a suitable barrier.

Include two doors, one for the high-voltage segment and one for the low-voltage segment. These doors shall have stainless steel hinges and pins and three-point latching with provisions for padlocking. Unlocking the padlock shall permit access to the low-voltage segment of the terminating compartment only. Access to the high voltage segment of the terminating compartment shall not be attained until an additional fastening device has been released.

Meet the dimensional requirements of Figure 7 of ANSI Publication C57.12.26, latest revision.

## Termination Arrangement and Dimensions

The termination arrangements and dimensions of Figures 6, 7 and 8 of ANSI Publication C57.12.26, latest revision shall be applicable to this specification.

## High-Voltage Terminations

Configuration - The configuration of the high-voltage terminations shall be Loop Feed (figure 6 & & ANSI C57.12.26, latest revision).

Type - The high-voltage terminations shall be 15 kV class bushing or wells and inserts suitable for use with 15 kV class loadbreak elbow connectors, respectively.

## Low-Voltage Terminations

Terminals - The terminal of all low-voltage terminations shall be as shown in Figure 9C of ANSI Publication C57.12.26, latest revision.

Configuration - The configuration of the low-voltage terminations shall be as shown in Figure 8A of ANSI Publication C57.12.26, latest revision.

Two hole termination lugs shall be used to terminate secondary cables to transformer spades. Transformer connectors (HOMAC Transformer Spade Connectors – ZBK Series or SGES approved equal) may be used to adapt the spade termination to multiple set screws for cable termination. Chair lugs will NOT be allowed for secondary termination at transformers. All bolts & hardware are to be of the proper type and size to match transformer spades.
All low-voltage terminations shall be externally bolted to facilitate field replacement.
All connections shall be wire brushed and deoxidized prior to installation.

## Fusing Equipment

Transformers shall be equipped with externally removable, oil immersed, expulsion fuses in loadbreak bayonets in series with under oil partial range current limiting fuses.

All under oil fuses shall be easily accessible.

The bayonet expulsion fuses and back-up current limiting fuses shall be coordinated to ensure that the current limiting fuse will only operate on faults internal to the transformer. The current limiting fuse used shall have an interrupting rating of 50,000 amperes (minimum) symmetrical.

## Core

All wye-wye connected transformers shall have four- or five-legged core construction or shall otherwise include provisions to prevent excessive tank heating. The core construction or other provisions for preventing tank heating shall be adequate for unbalanced loading conditions and for conditions of one or more of the primary phases of the transformer being energized from the same (single-phase) source.

## Insulation

All insulating paper used as layer insulation in transformer coils shall be coated on both sides with a thermosetting adhesive and properly cured prior to impregnating with oil, or the coils shall be wound with primary conductor containing a thermosetting adhesive that when properly cured will form an effective bond.

## Pressure Relief Device

Each transformer shall be equipped with a self-actuating pressure relief device to relieve slow pressure buildup and to automatically vent when pressure reaches ± 6 PSI.

## FINISH

The transformer shall be given a durable corrosion resistant nonchalking green or desert tan outdoor finish capable of meeting or exceeding EEI finishing requirements.

All transformer surfaces in contact with the pad shall be designed or treated to minimize corrosion.

## TESTING

All transformers shall be tested in accordance with the requirements of American National Standard Publication C57.12.26, latest revision. All transformers shall be capable of withstanding short-circuit tests.

## LOSS EVALUATION

All transformer losses must meet the latest DOE efficiency standards.

All actual tested loss data will be transmitted to the City of St. George Energy Services Dept.

## WARRANTY

The manufacturer shall warrant to purchaser that the apparatus or services to be furnished hereunder shall be of the highest quality and free from defects in material, workmanship, and title and will be of the kind designated in the pertinent purchase order. The manufacturer's warranty shall be effective for a period of twelve (12) months after the date of being energized. Terms of the manufacturer's warranty shall be included in the bid proposal and will be a criterion for evaluation of the proposal.

The manufacturer shall guarantee that all transformers furnished under this specification are of first class material and workmanship throughout, that they have been tested in accordance with this specification, and that the results of the tests comply with the requirements of this specification, and, in lieu of other claims against it, agrees to replace or repair:

- Any transformer found to be defective in material or workmanship or found not to be in compliance with the requirements of this specification before or during installation of the transformer.

- Any transformer failing during normal and proper use within the manufacturers guaranteed period, which shows defects of material or workmanship.

# SECONDARY SERVICE LINE AND METER INSTALLATION FOR RESIDENTIAL, SUBDIVISIONS, MOBILE HOMES, TRAILER PARKS, APARTMENTS, CONDOMINIUMS, AND COMMERCIAL BUILDINGS

## SCOPE

This standard outlines minimum requirements for service equipment, service conductors, and installation.

## GENERAL

All service equipment, service conductors, and installations that compromise the service of St. George Energy Services shall meet all applicable national, state and local codes and ordinances, including St. George Energy Services requirements.

Work Orders may be filled out at the Energy Services Department. Contractors may also call and request a Work Order, or may also fax a Work Order request directly to the Energy Services Department. (See page 42) Please allow 48 hours after permanent power inspection for paperwork to get to crews.

## UNDERGROUND SERVICE CONDUCTORS

**DEFINITION**: The underground supply conductors that extend from the utility's secondary system to the customer's meter.

All equipment and conductors installed shall meet or exceed applicable Energy Services Department requirements and local, state and national codes or ordinances.

### Burial Depths

The minimum burial depth for buried secondary service lines is 32 inches.

### Type

All underground service conductors must be type USE.

### Conduit

All underground services shall be installed in PVC schedule 40 conduit and have warning tape 12" below final grade. Special care will be taken to ensure conductors are not damaged during pulling operations. Pulling tension shall be monitored at all times to ensure proper installation.

Service Conduit that does not line up correctly from the ground to the meter base, steel flexible conduit may be used on 3" installations only. Up to an 8" diversion will be allowed.

## Splices

**Splices shall not be allowed**.

## Protection

When underground service conduits are exposed to physical damage, rigid or IMC type metal conduit shall be used.

## Conductor Size

Energy Services Department requires that services 125 amp or less be served by #1/0 aluminum conductor. 150 amp services will be #2/0 aluminum conductor. 200 amp services will be #4/0 aluminum conductor. Services greater than 200 amp will be sized by the Energy Services Engineering staff.

## METERING

All metering equipment and installations shall meet or exceed all applicable local, state and national codes and ordinances.

## SERVICE & METERING EQUIPMENT ITEMS

The main breaker or service disconnect shall be installed (residential or commercial) in a location that is readily accessible by utility and fire personnel.

Multiple disconnects may be used, however the installation shall meet the following requirements:

i. The installation shall comply with all NEC requirements
ii. Maximum number of disconnects 6 (grouped together)
iii. The service entrance equipment used will not physically allow more than 6 disconnects to be installed (now or in the future)
iv. All panels and other equipment shall be rated for service entrance use
v. A label is installed to identify the location as a multiple disconnect service configuration

Meter bases shall be located on the outside of buildings.

Per NEC 230.2, "A building or other structure served shall be supplied by only one service unless permitted in 230.2 (A) through (D)." In such cases where the building, connected buildings, or other structures have more than one service location being fed by different transformers, identification for each service in the form of a permanent plaque shall be provided in accordance to NEC 230.2 (E).

Plans shall be submitted to the Energy Services Department, Fire Department and Building Department for review and approval prior to construction.

Current Transformer enclosures and meter bases may be installed either on the tranformers or the outside of the building and shall be pre approved by SGES. Where CT metering is required **on the outside of buildings**, detailed drawings of the proposed service and metering

equipment for services rated over 400 amps shall be submitted to SGES for approval **prior to equipment manufacture and installation**. The location of the CT enclosure and meter base shall be readily accessible to utility personnel. CT enclosures shall have provisions to allow for SGES seals to be installed.

Self shunting meter bases shall be used for CT meter installations.

NOTE: Multiple CT metering installation **will not** be allowed on the Transformer.

## Service Disconnect

All single phase, three phase, and CT services shall be protected with a main disconnect means, accessible to Energy Services Department employees and emergency crews. Disconnect shall be sized to match service requirements.

If an adjustable main breaker is installed, the impact fees accessed will be based on the maximum ampacity setting of the breaker.

Meters must be installed at the closest point possible to the City designated power service line as indicated on approved plans. Any changes to this requirement shall be approved by SGES.

A level standing and working surface 30” x 30” shall be provided in front of all meters, permitting access to meter.

Meters shall not be located in carports, breezeways, covered or screened porches or other areas that may hinder access to meter or cause possible damage to the meter in the future, i.e., swinging doors, etc.

## Meter Standard

### Single Phase Metering

Any service 200 amps or less uses a regular self-contained 200 amp 4 jaw meter base. This is a 120/ 240 volt service. If the service is 120/208 volts, a 200 amp 5 jaw meter base is required. Above 225 through 400 amp services a 4 jaw meter base with a by-pass handle is required. Above 400 amps the service shall be C.T. metered with the base mounted where it is readily accessible for the meter reader. Contact Energy Services for any questions.

Note: Any single phase service over 400 Amps will need to be pre-approved by the Energy Services Department prior to installation. A detailed drawing and proposed equipment will need to be submitted for review and approval.

### Three Phase Metering

Any service 400 amps or less requires a regular self-contained 7 jaw meter base with a by-pass handle. Any service over 400 amps will be metered with current transformers with an auto 20 amp self-shunting meter base with a separate C.T. enclosure installed on the building

or inside switch gear. If installed outside, equipment needs to be accessible to Energy Service personnel.

### Point of Service

Self-contained meter 1-phase and 3-phase up to 400 amps point of service is the line side termination point at the meter. C.T. metered point of service is the transformer secondary lug. Overhead point of service is the connection at the mask.

## Mobile Homes / Trailer Parks

Typical requirements for mobile homes and trailers with individual meters are shown on diagrams. When meter mounting provisions differ from these requirements, Energy Services Engineering will detail specific requirements.

When mobile home parks or trailer parks are metered at a single point, Energy Services shall detail the metering provisions at that point.

## General Requirements

Metering provisions must be installed in a true plane.

Metering provisions with extruded or cast aluminum meter jaws shall not be used.

Mobile home or trailer meter pedestals shall be constructed and installed so that the vertical distance from ground level to the centerline of the meter is 30” minimum to 84” maximum.

No conductor will be installed from pedestal to pedestal, secondary boxes shall be used.

## Apartments/Condominiums or Multiple Meter Packs

## Mounting Heights

### Single Horizontal Row of Meters

When meter for a complex can be mounted in a single horizontal row, the vertical clearance from ground to center line of meter shall be 5’ minimum to 7’ maximum.

### Multiple Rows of Meters

When meters in a complex must be mounted in two or more horizontal rows, the vertical distance from the ground level to the center line of top row of meters shall be 7’ maximum and the distance from the ground level to the center line of the bottom row of meters shall be 3’ 6” minimum.

### Labeling of Meters

Meter bases shall be numbered accordingly to apartment, condo, or unit numbers as recorded on the official plat. The number must be stamped on the base for permanent identification using ½” high letters. This will be verified during the installation of the meter.

## SERVICE CONNECTION CRITERIA

1) City of St. George Building Inspection will inspect all electrical beyond meter point. When inspection has passed, inspector will place sticker on meter base which states Electrical Contractor shall schedule with Energy Services Department for wire pull and meter installation.

| **CITY OF ST. GEORGE ENERGY SERVICES** |
|---|
| **For meter set and Permanent power connection** |
| **Call: 435-627-4800**<br>**Fax: 435-627-4809** |

2) After permanent power inspection is completed and passed off by building inspection, the Electrical Contractor will schedule a time and date to meet Energy Services crew to pull in service from the meter base to the power source (i.e. transformer or secondary box). Contractor will provide service conductor, pulling lube, tags, sealant and appropriate pulling equipment. Energy Services will assist crews with pulling cable. The contractor will work on the de-energized side of the services and make up all connections in the meter base. Energy Services crews will make final inspection before energizing.

**NON ENERGY SERVICE PERSONNEL SHALL NOT ACCESS ANY ENERGIZED EQUIPMENT, INCLUDING BUT NOT LIMITED TO: TRANSFORMERS, VAULTS, SWITCHES, SECONDARY BOXES AND STREET LIGHTS.**

3) Modification form – This form is used to request a time and date for power crews to meet the contractor to pull in service conductor. Modification forms should be faxed to the Administration office at 435-627-4809. After wire is pulled in the following will happen:
   a. Contractor will make up all meter connections
   b. Energy Services crew will inspect connections, wire and breaker size.
   c. Energy Services crew will tag wires, seal conduits.
   d. Energy Services crew will energize service, check voltage and rotation if applicable, place meter and meter seal, and lock equipment.
   e. If contractor installs cable without Energy Services present, the cable will be removed, inspected and pulled again at the cost of the contractor.

**PLEASE ALLOW 48 HOURS AFTER PERMANENT POWER INSPECTION FOR PAPERWORK TO GET TO CREWS.**

# STREETLIGHT INSTALLATION

## POLICY

It is the policy of the City that all street lights erected in the City shall adhere to the following.

## PURPOSE AND OBJECTIVE

To ensure street lights are installed according to uniform construction guidelines and equipment specifications.

## PROCEDURES AND RESPONSIBILITIES

(This specification will be reviewed and reevaluated for cost on a three year basis.)

## Standard Lights and Equipment

The lights shall be mounted on an aluminum or galvanized steel, single member arm pole designed to withstand 100 mile per hour wind (certified). All poles shall have an access hole at or near the base for access to wiring. The overhang shall not exceed 25% of the mounting height. The following is the guideline to be used for plat preparation.

**Table 6**

| Right of Way Road Width | Mounting Height | Pole Spacing | Fixture Type |
|---|---|---|---|
| 25-50’ | 14’ | 220’ - 250’ | Historical |
| 25-50’ | 20’ | 300’ – 350’ | Shoebox |
| 25-50’ | 30’-35’ | 300’ - 350’ | Shoebox or Cobra Head |
| 51-62’ | 35’ | 300’ - 350’ | Cobra Head |
| Over 62’ | 35’ | 300’ - 350’ | Cobra Head |

This may be subject to change as determined by Energy Services Inspector as per any safety requirements or instructions. All arms shall be 2-3/4” outer diameter (2” pipe) luminar mounting. All poles shall be anchor base poles and the foundation design shall be adequate for pole length, arm installation, soil conditions and 100 mile per hour winds (as determined by the Energy Services engineer). All luminaries shall be 120 volt with twist lock style photo cell control. Each fixture will have its own fusing and photo cell control. They will be:

### Photo Cell

Fisher Pierce Model #FP7790B-SSS

### Fixture

Cobra head style – LED

- Cooper Streetworks – VERD-CO2H-D-U-T3-4N7-10K-AP
- Phillips-RFM-160W48LED4K-G2-R3M-UNV-DMG-FAWS-RCD7-GY3

## Cobra Head Arm

Galvanized steel pole used for Cobra Head style with slotted bolt pattern plate 1” thick for 12”-13” bolt circle base. 8’ (2”-2-3/8” O.D. circumference) arms will be used on poles.

35’ pole with 8’ Arm – Prior to ordering, contact Energy Services Department for approval.

## Historical Lights

If a residential subdivision or project has a 50’ wide or less roadway right-of-way and would like a more aesthetic historical light, they may order the following:

### PHILLIPS LED – Metroscape-C

Historical 14’ spun aluminum pole with base

| | |
|---|---|
| Pole(Black) | # (SP8715-14A) |
| Light Fixture & Lights | MPTR-C-140L2100WW-G1-3-UNV-DMG-(FAWS-013)-FN10-RCD7-TN3-BKTX |

See drawing numbers for the corresponding foundation base. The Energy Services Department staff will design the spacing of these lights.

If a residential subdivision or project has 50’ wide or less width road and would like a more aesthetic decorative square light, they may order the following:

### COOPER-LED

| | |
|---|---|
| Pole: Square Type | 30’ SSS-30-60-3-A2-DB |
| | 20’ SSS-4A20SFM1X |

Light Fixture – Shoe Box Type

USSL-A02-D-U-T3-SA-BZ-10K-4N7 – Cooper (30’ pole only)
USSL-A01-D-U-T3-SA-BZ-10K-4N7 – Cooper (20’ pole only)

There will be no substitutes to the above specifications without Energy Services engineer’s approval.

## Installation

**All street lighting installations shall be performed by a pre-qualified contractor.**
Standard street lights shall be installed at the owner/developer’s expense in all new subdivisions or projects.

From secondary box to secondary box, all street light circuits shall consist of #4 URD aluminum wire in 2” conduit. Wire colors shall be green for ground, white for neutral, and black for phase. In the light fixture, the wire size shall be #10 THHN copper wire.

A maximum of 6 streetlights per circuit will be allowed. Minimum conduit size for street light conductions shall be 2”.

Where streetlights are placed in the sidewalk or back of sidewalk, the foundation base will be made level with the sidewalk grade. Secondary boxes will be installed adjacent to streetlight pole. Cable will not run from light to light but from box to box.

All streetlight poles placed next to or near a state roadway will be a break-away base type.

# 15 kV PRIMARY UNDERGROUND EPR CABLE SPECIFICATION

## SCOPE

These specifications cover the construction, mechanical and electrical requirements for aluminum conductors insulated with EPR for operation at 15 kV phase to phase.

The cable is intended for operation at 60 Hz single-phase or three-phase (line-to-line) and shall be suitable for operation in conduit, underground duct, riser conduit, for wet and dry locations, and in open air in sunlight. The cable will be used on underground distribution circuits.

## GENERAL

Cable purchased under this specification shall comply with the latest AEIC and all applicable ICEA and ASTM specification, with additions and modification as detailed herein. Each manufacturer must submit their latest AEIC qualification acceptance. All manufacturing and testing procedures shall follow ICEA S-94-649, latest edition, concentric neutral cables, 5-46 kV.

The manufacturer must be able to certify a performance record demonstrating a minimum of 30 years successful operating experience for EPR cables in utility and industrial power cable application.

## REQUIREMENTS

The cable shall meet the requirements of ICEA S-69-649 and AEIC CS8, latest edition except where it conflicts with the requirements of this specification, in which case this specification shall apply.

## BASIC CONSTRUCTION

1/C Class B strand aluminum conductor, triple tandem extruded (three in-line extruders) semi-conducting ethylene-propylene, extruded semi-conducting ethylene-propylene rubber insulation screen, followed by a concentric wrap of copper neutral wires, with an encapsulating polyethylene insulating jacket with three red stripes.

## CENTRAL CONDUCTOR

The aluminum shall be per ASTM B-609. Stranded Conductor shall be class B stranded in accordance with ASTM B-231.

Conductors shall meet electrical resistance requirements of ICEA S-94-649.

## CONDUCTOR SCREEN

The conductor screen shall be an extruded semi-conducting ethylene-propylene meeting the requirements of ICEA S-94-649. Thickness of the conductor screen shall be in accordance with AEIC CS8. The screen shall be inseparably bonded to the insulation and strip freely from the conductor.

## INSULATION

The insulation shall be ethylene propylene elastomer (EPR) and shall meet the requirements of ICEA S-94-649. Insulation thickness shall be 0.220” to provide a 133% insulation level. The City will not accept 0.175” insulated cables.

The insulation shall be suitable for use in wet or dry locations at conductor temperatures not to exceed 105° C for continuous operation, 140° C for emergency overload conditions, and 250° C for short-circuit conditions.

The insulation compound shall be extra clean and stored in a contamination-free bulk handling system to maintain cleanliness prior to conveyance and use in the extruder.

## INSULATION SCREEN

The insulation screen shall be an extruded semiconductor meeting the requirements of ICEA S-94-649. The screen compound shall be compatible with the insulation and identified as semi-conducting by surface printing.

The insulation screen shall be clean stripping and have peel strength from the insulation between 3 and 16 lbs/0.5” width when tested per ICEA S-94-649. The thickness of the extruded semi-conducting, EPR screen shall be per ICEA S-94-649-2000, Table 5-1

## CONCENTRIC NEUTRAL CONDUCTOR

The neutral wires shall be bare copper, evenly and helically wrapped directly over the insulation screen with a lay of 6-10 times diameter over the wires. The neutral wires shall be full or one-third as required.

## OVERALL JACKET

The overall jacket shall be black, sunlight resistant, insulating polyethylene and shall substantially fill the spaces between the concentric neutral wires. The jacket shall be 0.050” minimum average thickness when measured above the neutral wire diameter for conductor size #1/0. The jacket thickness for 750 kcmil shall be 0.080”. The jacket shall be free stripping from the insulation screen and concentric neutral wires. Three extruded red stripes shall be applied to the jacket surface spaced 120° apart

## CABLE IDENTIFICATION

The outer surface of each cable shall be durably marked throughout its length in accordance with AEIC C8.

An identifying legend shall be printed on the jacket with contrasting ink repeated at 2’ intervals with unmarked surfaces not exceeding 6”. The legend shall provide the following information:

- Year of Manufacture
- Manufacturer name and plant code
- Conductor Size - either AWG or kcmil
- AL

- Voltage
- Insulation Percent
- Insulation Thickness
- Insulation Type
- Footage at 2’ intervals
- Neutral size

## TESTS

The following production tests shall be performed on the cable and submitted to the utility in the form of Certified Test Reports.

A.C. High Voltage test in accordance with ICEA S-94-649-2000.

Corona / partial discharge test shall be performed in accordance with procedures of ICEA publication T-24-380 and X-Y recording graph will be furnished showing the partial discharge results.

## PACKAGING AND MARKING

The cable shall be furnished in cutting lengths as single conductor.

The reels shall be substantially constructed non-returnable wood reels to safely carry the weight of the cables. Each reel of cable shall be protected with NEMA Class 2 covering. The bottom and top cable ends shall be properly secured to the reel.

There shall be no water or corrosion in the standard conductor of the completed cable when reel is shipped. Each end of cable shall be capped and sealed watertight to prevent the entrance of moisture into the cable during transit or outdoor storage.

Reels shall be non-returnable, double layered, wood flanged type, substantially constructed to afford proper protection of the cable during shipment and handling. Reels shall have a minimum outside drum diameter not less than prescribed in ICEA A-9-428, for each cable type.

Each reel shall be marked with a weather-resistant label securely attached to a flange of the reel and plainly stating the destination, purchaser’s factory production lot identification number, date of manufacture, description of cable, length of cable on reel and gross and tar weight of reel. All reels will be shipped and stored in an upright position. All others will be rejected.

Reel size shall be such to carry an average of 2,500’ of cable per reel, unless specified lengths are noted.

## QUALIFIED MANUFACTURERS

Supply cables manufactured by Okonite or Kerite only.

## INSTALLATION

Distribution primary URD - 2 sizes of primary conductor will be accepted on new installations 200 amp and below:

a. 200 amp feeders - #1/0 alum. Kerite or Okonite, as per Energy Services spec.
b. 600 amp feeders – 750 kcmil alum. Okonite or Kerite, as per Energy Services spec.

## WARRANTY

Cable suppliers must offer a minimum of a 40 year warranty against electric breakdown due to materials or workmanship.

# PRIMARY JUNCTION VAULT SPECIFICATIONS

### 3-phase or 1-phase above ground primary junction fiberglass vault with fiberglass sleeve

Units must meet the following specifications:

- Penta head bolts on lid.
- All hardware including hinges to be stainless steel.
- Color - Green, desert tan, or willow green.
- 4-Way Junction required.

Approved Vendors:

| | |
|---|---|
| Nordic | ND 350 (color) 10/xx (molded enclosures – 3 phase) |
| Nordic | ND 150 (color) 10/xx (molded enclosures - 1 phase) |

Vault installations will include three 4-way junctions, parking bushings, stingerless DR caps, arrestor elbows, ground rods and all ground lugs.

# PADMOUNT ENCLOSED SWITCHGEAR SPECIFICATIONS

The Energy Services Department shall determine the class of switchgear needed per each job. The switchgear specifications being a 600 Amp Main Buss capacity, which is a 600 Amp live front configuration. These will be designed per individual needs.

Outdoor style, manual operation are as follows:

| | |
|---|---|
| kV, Nominal | 14.4 |
| kV, Maximum Design | 17.0 |
| kV, BIL | 95 |
| Main Buss Continuous, Amperes | 600 |
| Three-Pole Interrupter Switches | |
| Continuous, Amperes (Source/Feeder) | 600 |
| Live Switching, Amperes (Source/Feeder) | 600 |
| Two-Time Duty-Cycle Fault-Closing | |
| Amperes Rms Asymmetrical | 23,400 |
| Fuses with Integral Load Interrupter | |
| Maximum, Amperes | 200E |
| Live Switching, Amperes | 200 |
| Two-Time Duty-Cycle Fault-Closing | |
| Capability, Amperes Rms Symmetrical | 12,500 |
| Short-Circuit Ratings | |
| Amperes, Rms Symmetrical | 12,500 |
| MVA Three-Phase Symmetrical at | |
| Rated Nominal Voltage | 310 |

The momentary and two-time duty-cycle fault-closing ratings of switches, momentary rating of bus, interrupting ratings of fuses, and on-time duty-cycle fault-closing capabilities of the fuses with integral load interrupters shall equal or exceed the short-circuit ratings of the pad-mounted gear.

The pad-mounted gear shall consist of a single self-supporting enclosure, containing single blade interrupter switches, non-key interlock; dual purpose barriers for the switches and fuses (-G1 & G2); component grounding studs for switches and fuses (H & J).

The switches and fuse components shall be arranged for full visibility when the enclosure doors are open. Open switch gaps and blow-fuse indicators shall be readily visible to provide for ease of operation.

Interrupter switches shall have a two-time duty-cycle fault-closing rating equal to or exceeding the short-circuit rating of the integrated pad-mounted gear assembly. This rating defines the ability to close the interrupter switch twice against a three-phase fault with asymmetrical current in at least one phase equal to the rated value, with the switch remaining operable and able to carry and interrupt rated current. Tests substantiating this rating shall be performed at maximum

design voltage with current applied to at least 10 cycles. Certified test abstracts establishing this rating shall be furnished upon request.

Interrupter switches shall have the capability established by test to perform switching duties which include interrupting load current up through the assigned live-switching rating, as well as transformer magnetizing currents associated with the applicable loads, and cable-charging current and line-charging current typical for distribution systems of the applicable voltage ratings. All arcing accompanying interruption shall be contained within the interrupters, and arc products and gases evolved during interruption shall be vented through exhaust-control chambers to eliminate discharge of ionized gases. Switches shall have a single blade per phase and shall be externally operable. A quick-make, quick-break mechanism, nondefeatable under normal operation, shall make operation of the switch blades independent of the speed of the manual operating handle.

Solid-material power fuse shall be capable of detecting and interrupting all faults up to the short-circuit interrupting rating of the integrated pad-mounted gear assembly. Fusible elements shall be non-aging and non-damageable. All arcing accompanying power fuse operation shall be contained within the fuse and all arc products and gases evolved shall be effectively contained within exhaust control devices during fuse operation. Power fuse shall have a blown-fuse indicator that shall be readily visible without removing the fuse from the mounting. Fuse type shall be Type SM-4.

Fuse mounting jaw contracts shall be equipped with integral load interrupters to permit live switching of fuses with a hook-stick. Integral load interrupters shall have an on-time duty-cycle fault-closing capability equal to the short-circuit rating of the pad-mounted gear. The duty-cycle capability defines the level of available fault current into which the fuse can be closed without a quick-make mechanism and when operated vigorously through its full travel without hesitation at any point, with the integral load interrupter remaining operable and able to carry and interrupt currents up to the emergency peak-load capabilities of the fuse.

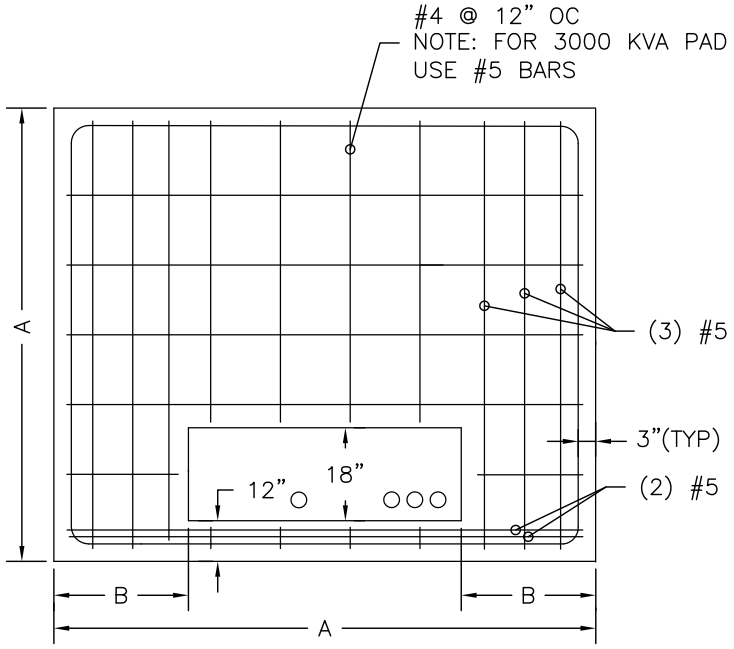


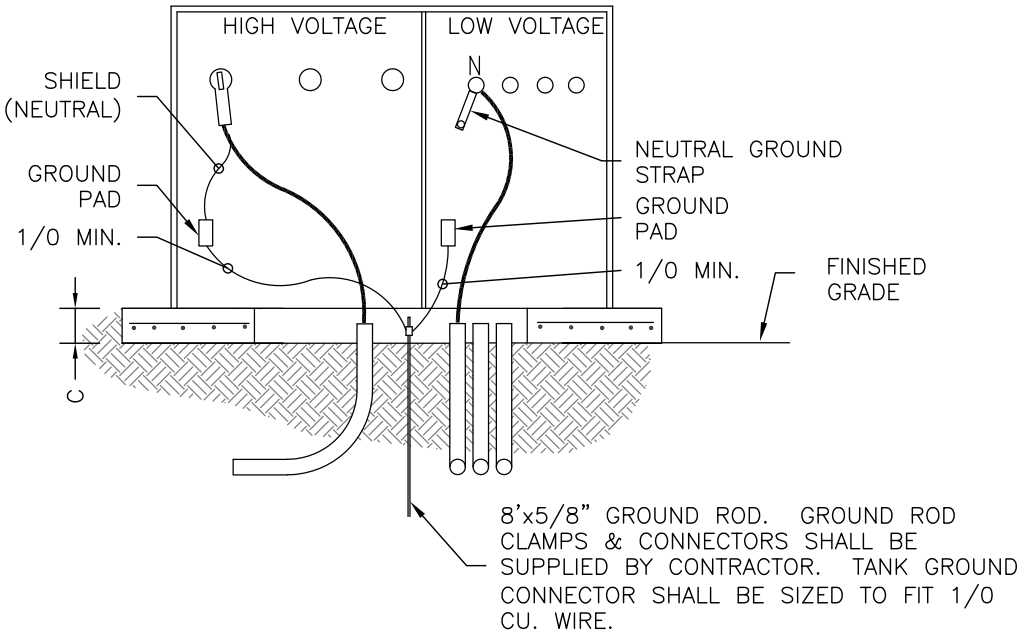


| TRANSFORMER PAD CHART (3,000 PSI) | | | |
|---|---|---|---|
| RATING | A | B | C |
| 0–750 KVA | 7'0" | 15" | 6" |
| 1000–3000 KVA | 9'0" | 18" | 12" |

REFER TO SHEET D1–A FOR TRANSFORMER
NOTES AND INSTALLATION DETAILS.

| REVISIONS: | | | |
|---|---|---|---|
| REV | DATE | BY | DESCRIPTION |
| | | | |
| | | | |
| | | | |

APPROVED BY: –
DRAWN BY: *RWM*
DATE: –
FILE: –

THREE PHASE TRANSFORMER
AND PAD DETAILS

CITY OF ST. GEORGE
ENERGY SERVICES DEPARTMENT
UNDERGROUND STANDARDS

DETAIL
D1

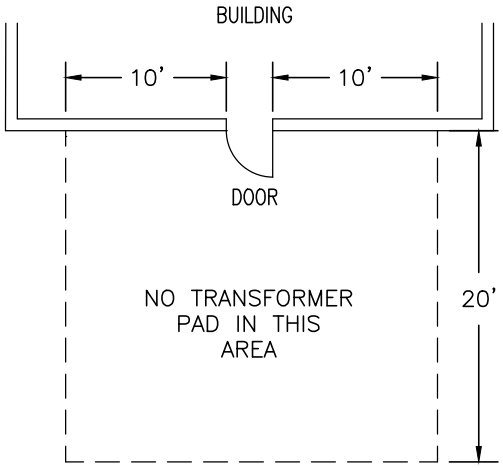


DETAIL A

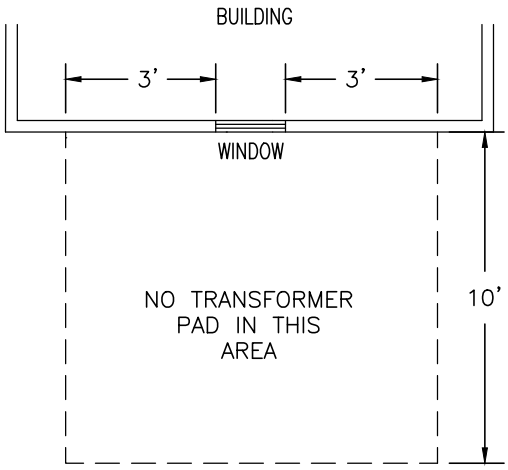


DETAIL B

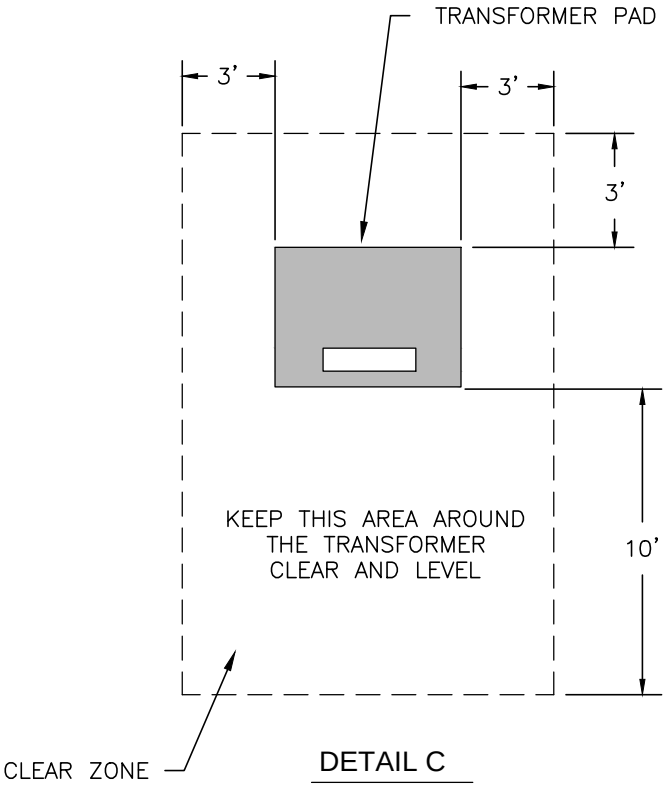


DETAIL C

## NOTES:

1. SITE PREPARATION. ALL SOIL BENEATH THE PAD SITE MUST BE COMPACTED AND LEVEL PRIOR TO SETTING OR POURING THE PAD TO PREVENT SETTLING.

2. BARRIERS. IF THE TRANSFORMER PAD IS TO BE LOCATED IN AREAS SUBJECT TO VEHICULAR TRAFFIC, (PARKING LOTS, DRIVEWAYS, ETC.) CONTACT ST GEORGE ENERGY SERVICES DEPT. FOR PROTECTIVE BARRIER REQUIREMENTS.

3. PAD SHALL BE 10' MINIMUM FROM COMBUSTIBLE SURFACES INCLUDING EVES.

4. REFER TO DETAILS A AND B FOR TRANSFORMER PAD INSTALLATION ADJACENT TO BUILDING DOORS AND WINDOWS.

5. REFER TO DETAIL C FOR CLEAR ZONE AROUND TRANSFORMER PAD.

6. NO ABOVE GROUND IRRIGATION SYSTEMS WITHIN 10' OF TRANSFORMER PAD. XEROSCAPE LANDSCAPING REQUIRED IN THE CLEAR ZONE AROUND THE TRANSFORMER.

7. INSTALL TRANFORMERS 12" BEHIND SIDEWALK. IN LOCATIONS WHERE THERE IS NO SIDEWALK, INSTALL TRANSFORMERS 6' BACK OF CURB.

| REVISIONS: | | | |
|---|---|---|---|
| REV | DATE | BY | DESCRIPTION |
| | | | |
| | | | |
| | | | |

APPROVED BY: –
DRAWN BY: *RWM*
DATE: –
FILE: –

THREE PHASE TRANSFORMER AND PAD DETAILS

CITY OF ST. GEORGE
ENERGY SERVICES DEPARTMENT
UNDERGROUND STANDARDS

DETAIL

D1-A

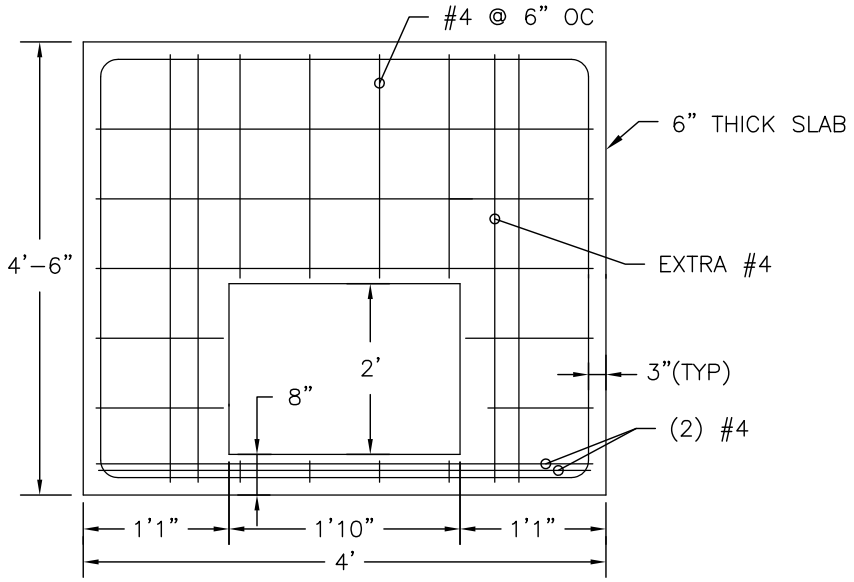


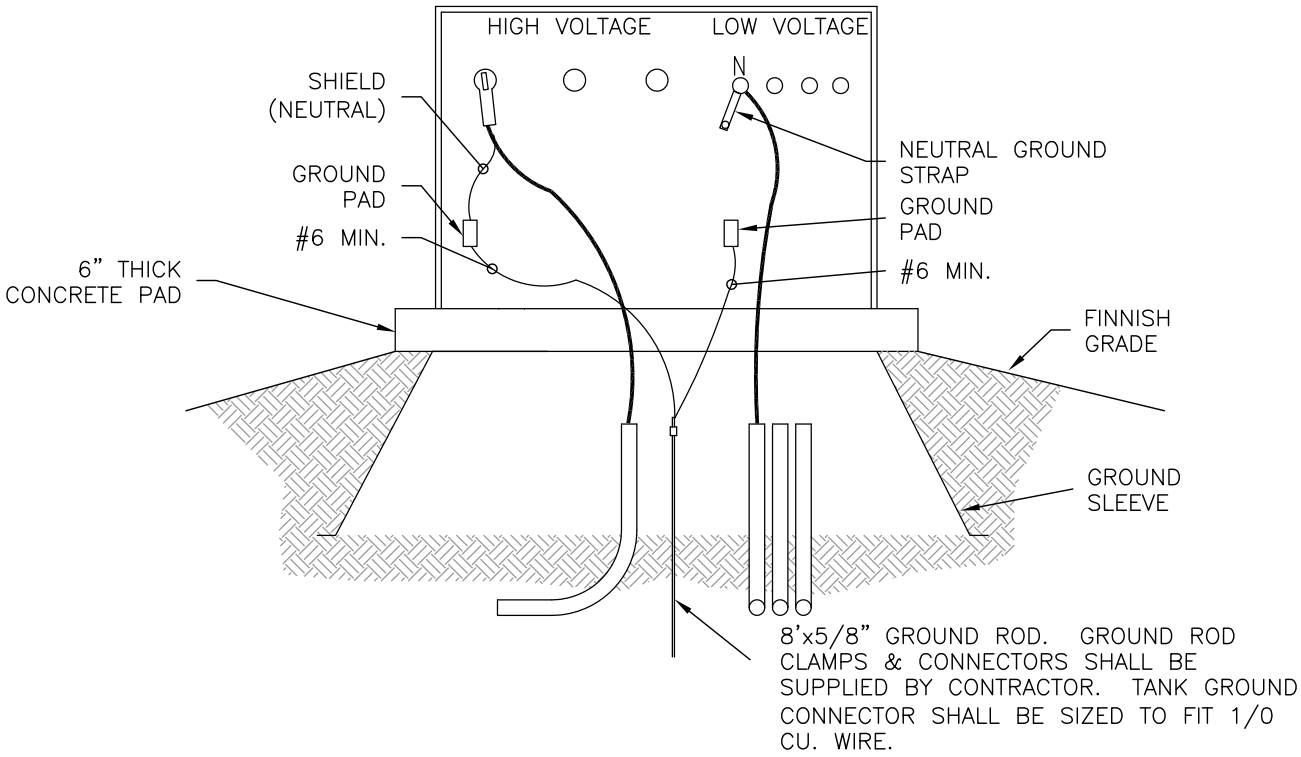


## 167 kVA TRANSFORMER PAD

REFER TO SHEET D1-A FOR TRANSFORMER NOTES AND INSTALLATION DETAILS.

| REVISIONS: | | | |
|---|---|---|---|
| REV | DATE | BY | DESCRIPTION |
| | | | |
| | | | |
| | | | |

APPROVED BY: –
DRAWN BY: –
DATE: –
FILE: –

SINGLE PHASE TRANSFORMER AND PAD DETAILS

CITY OF ST. GEORGE
ENERGY SERVICES DEPARTMENT
UNDERGROUND STANDARDS

DETAIL
D2

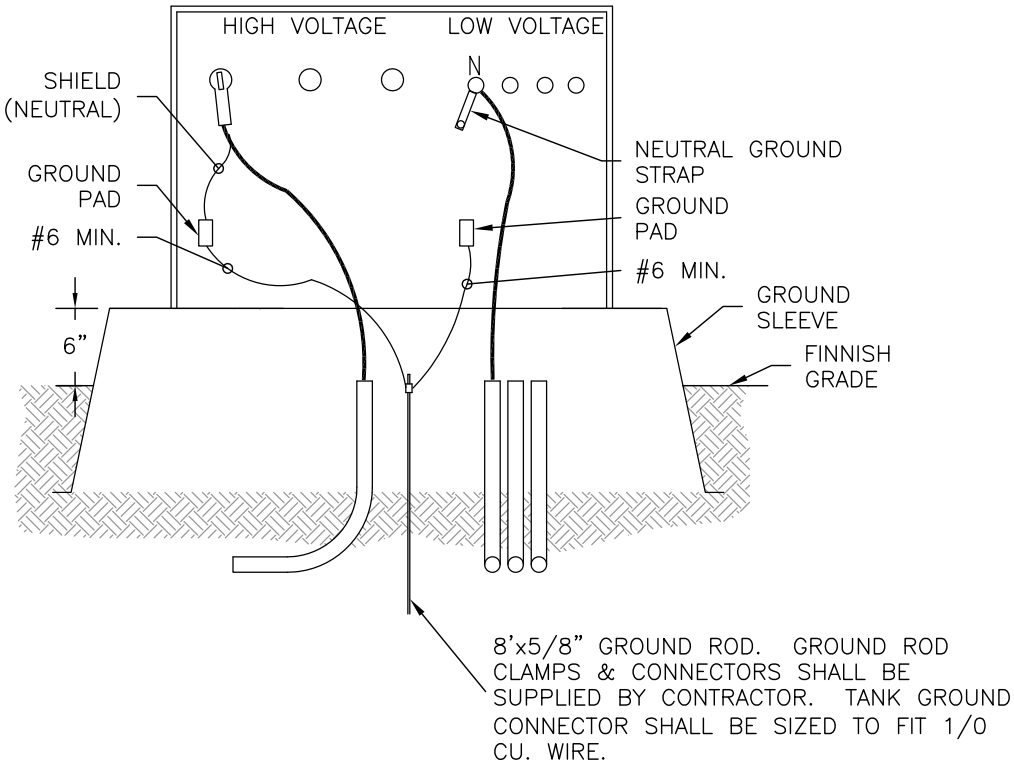


100 KVA TRANSFORMER AND BELOW

REFER TO SHEET D1–A FOR TRANSFORMER NOTES AND INSTALLATION DETAILS.

| REVISIONS: | | | |
|---|---|---|---|
| REV | DATE | BY | DESCRIPTION |
| | | | |
| | | | |
| | | | |

APPROVED BY: –
DRAWN BY: –
DATE: –
FILE: –

SINGLE PHASE TRANSFORMER AND PAD DETAILS

CITY OF ST. GEORGE
ENERGY SERVICES DEPARTMENT
UNDERGROUND STANDARDS

DETAIL
D2-A

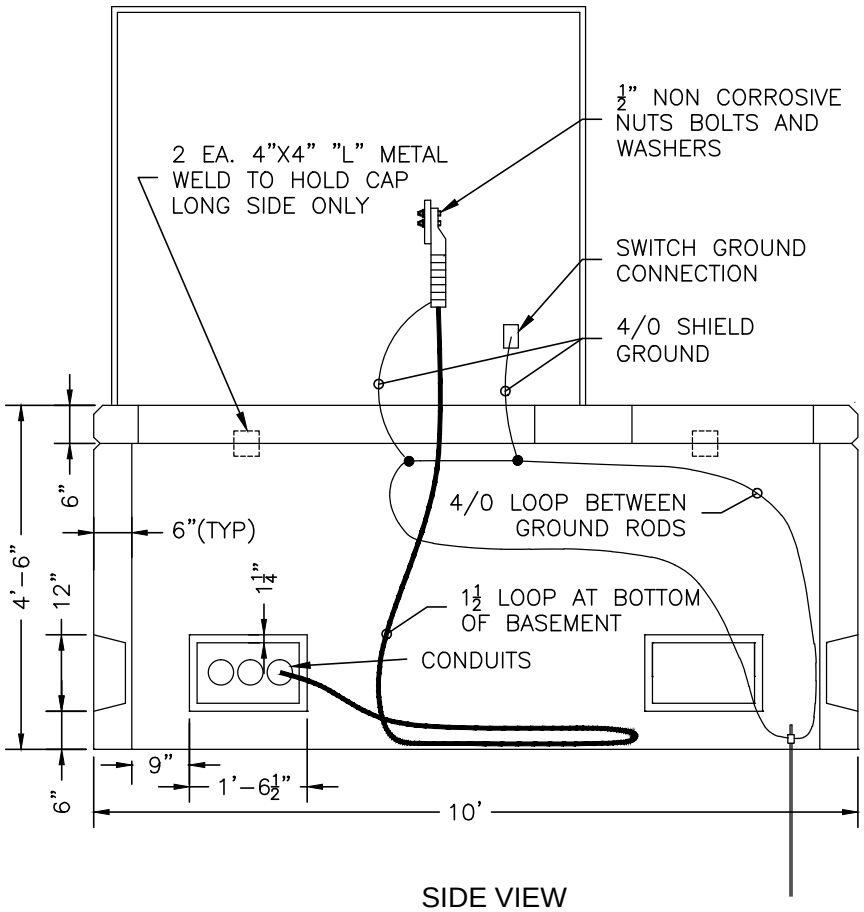


SIDE VIEW

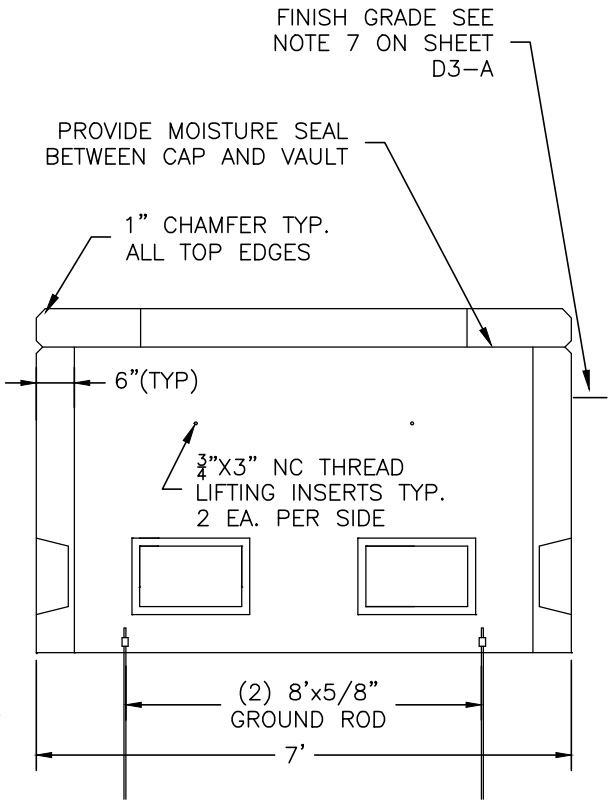


SHORT SIDE VIEW

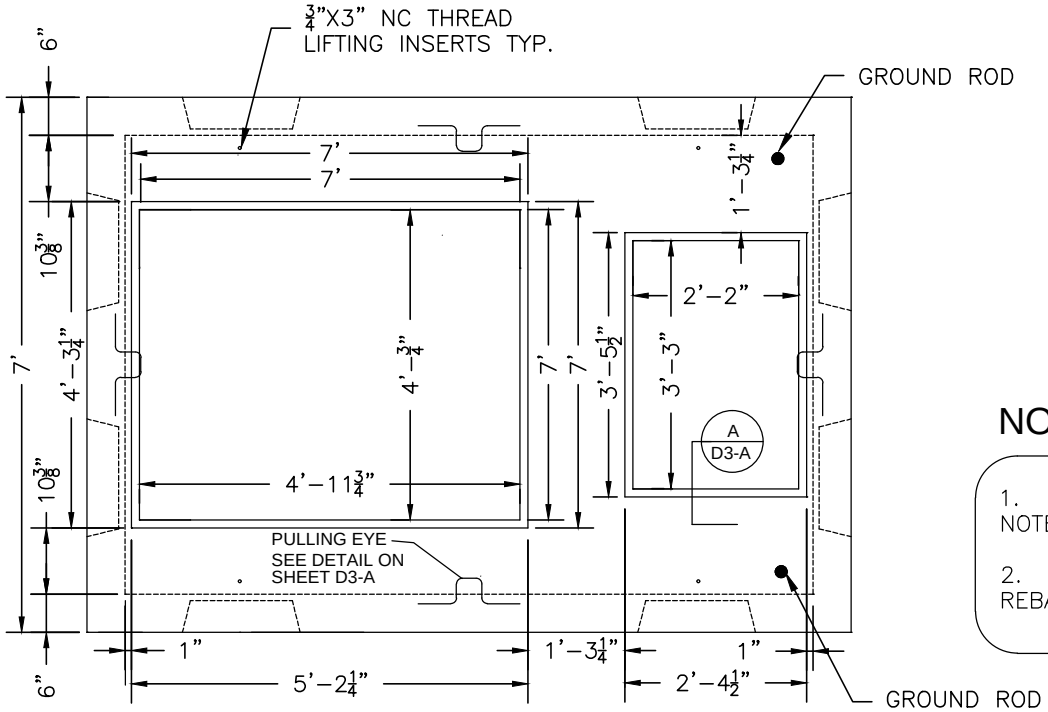


PLAN VIEW

## NOTES:

1. REFER TO SHEET D3-A FOR NOTES AND ADDITIONAL DETAILS.

2. REFER TO SHEET D3-B FOR REBAR DETAILS.

| REVISIONS: | | | |
|---|---|---|---|
| REV | DATE | BY | DESCRIPTION |
| | | | |
| | | | |
| | | | |

APPROVED BY: –
DRAWN BY: –
DATE: –
FILE: –

PAD MOUNT SWITCH GEAR DETAILS

CITY OF ST. GEORGE
ENERGY SERVICES DEPARTMENT
UNDERGROUND STANDARDS

DETAIL
D3

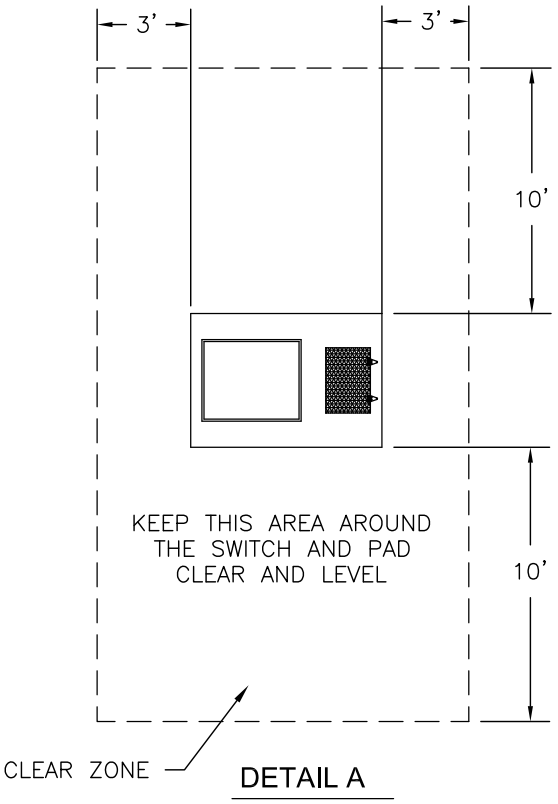


DETAIL A

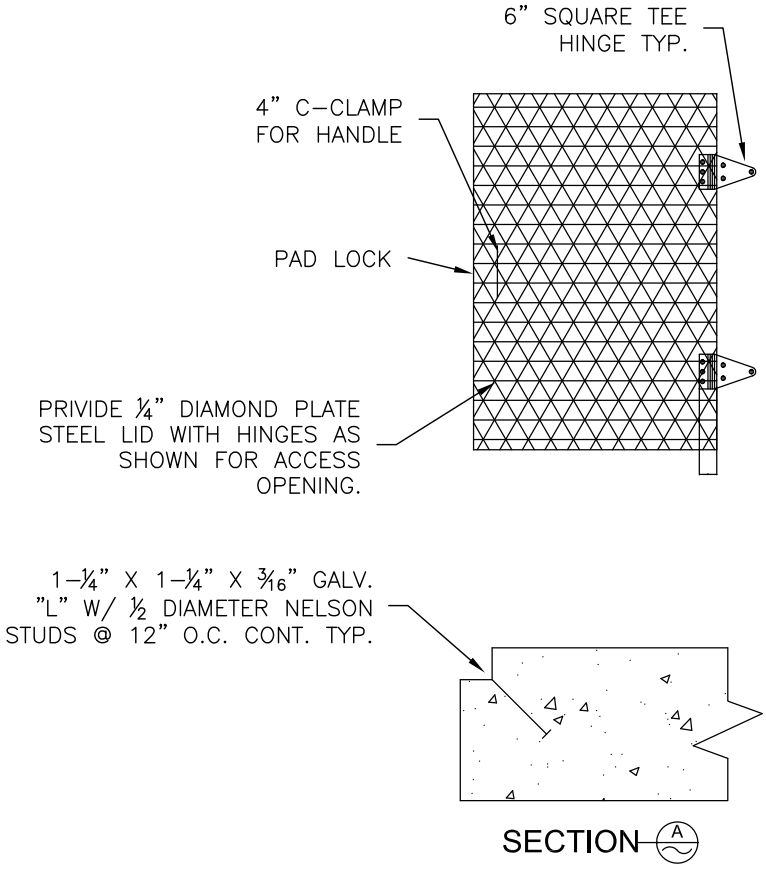


SECTION A

SWITCH -VAULT/LID DETAIL

## NOTES:

1. GROUNDING SHALL BE DONE BY CITY POWER CREWS.

2. BARRIERS. IF THE PAD MOUNT SWITCH GEAR IS TO BE LOCATED IN AREAS SUBJECT TO VEHICULAR TRAFFIC, (PARKING LOTS, DRIVEWAYS, ETC.) CONTACT ST GEORGE ENERGY DEPT. FOR PROTECTIVE BARRIER REQUIREMENTS.

3. PAINT LID WITH 2 COATS OF RED OXIDE STEEL PRIME. APPLY 1 COAT OF OIL BASE GRAY FINISH COAT.

4. CAULK JOINT LID CONTACT WITH CONTINUOUS GRAY SILICON CAULKING.

5. REFER TO DETAIL A FOR CLEAR ZONE AROUND PAD MOUNT SWITCH GEAR.

6. NO ABOVE GROUND IRRIGATION SYSTEMS WITHIN 10' OF PAD MOUNT SWITCH GEAR. XEROSCAPE LANDSCAPING REQUIRED IN THE CLEAR ZONE AROUND THE PAD MOUNT SWITCH GEAR.

7. FINISH GRADE SHALL BE 12" FROM TOP OF THE BASEMENT LID.

8. PRIOR TO SETTING THE SWITCH BASEMENT, THE CONTRACTOR SHALL INSTALL 6" PAD OF PEA GRAVEL. THE PEA GRAVEL SHALL EXTEND 12" PAST THE BASEMENT WALL.

| REVISIONS: | | | |
|---|---|---|---|
| REV | DATE | BY | DESCRIPTION |
| | | | |
| | | | |
| | | | |

APPROVED BY: –
DRAWN BY: –
DATE: –
FILE: –

PAD MOUNT SWITCH GEAR DETAILS

CITY OF ST. GEORGE
ENERGY SERVICES DEPARTMENT
UNDERGROUND STANDARDS

DETAIL
D3-A

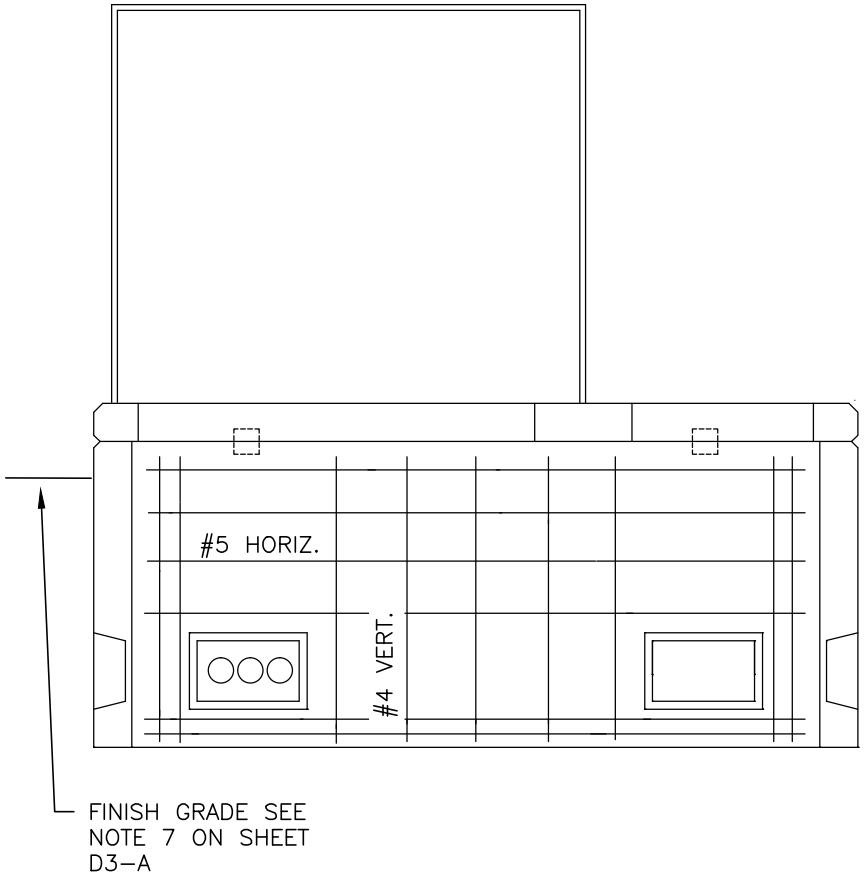


SIDE VIEW

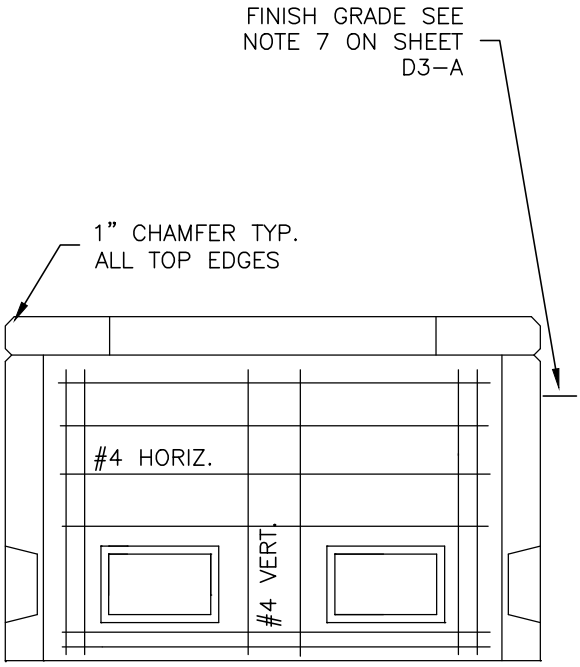


SHORT SIDE VIEW

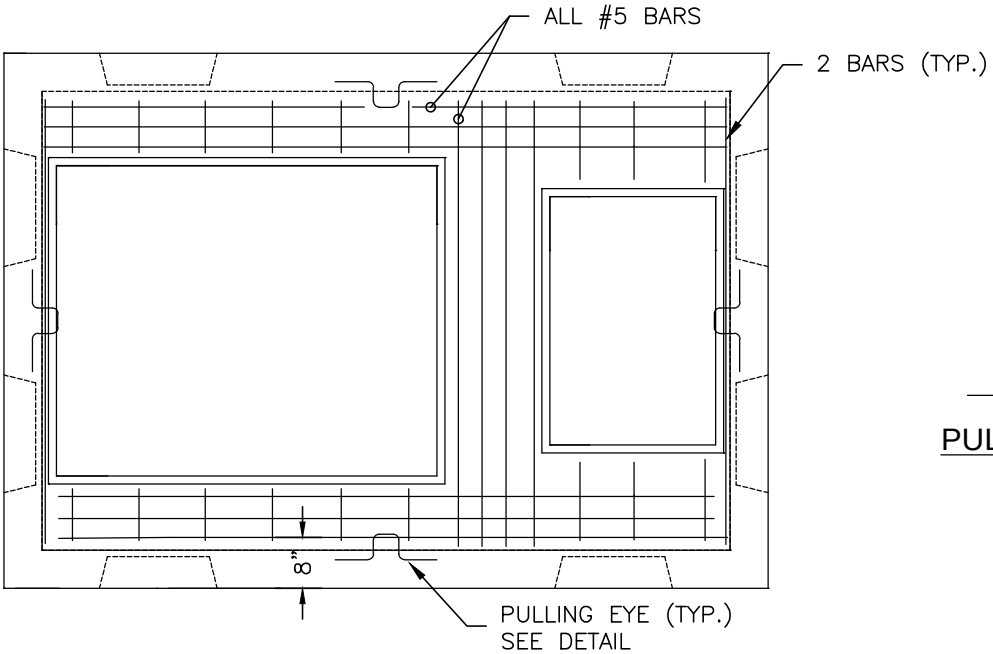


PLAN VIEW

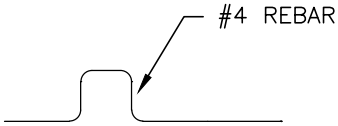


PULLING EYE DETAIL

| REVISIONS: | | | |
|---|---|---|---|
| REV | DATE | BY | DESCRIPTION |
| | | | |
| | | | |
| | | | |

APPROVED BY: –
DRAWN BY: –
DATE: –
FILE: –

PAD MOUNT SWITCH GEAR DETAILS

CITY OF ST. GEORGE
ENERGY SERVICES DEPARTMENT
UNDERGROUND STANDARDS

DETAIL

D3-B

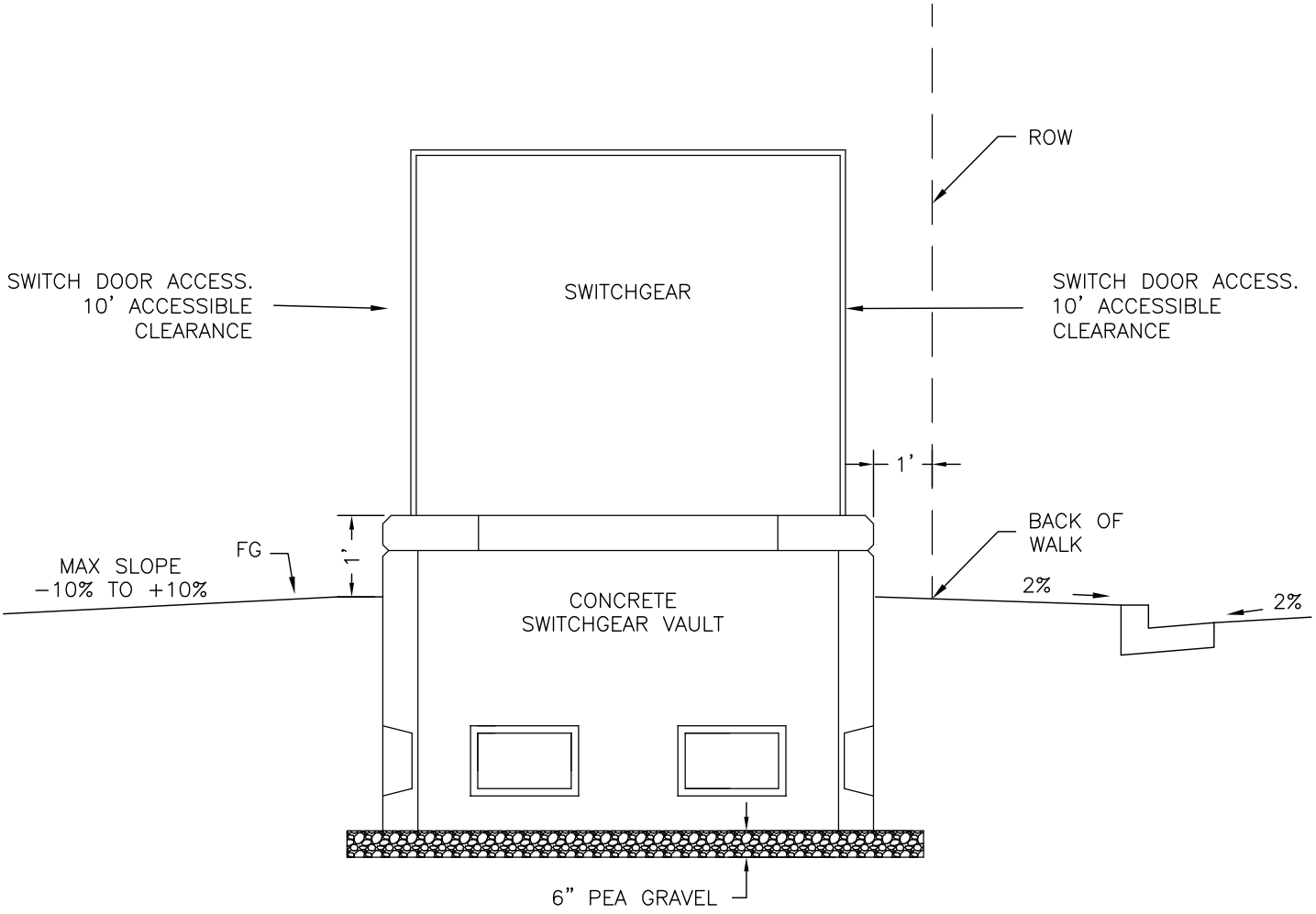


STANDARD GRADING AROUND SWITCHGEAR

## NOTES:

1. SLOPE FINISH GROUND AWAY FROM SWITCHGEAR VAULT ALL DIRECTIONS.
2. STANDARD GRADING AROUND SWITCHGEAR. COORDINATE WITH SGES FOR VARIATIONS.
3. NO ABRUPT GRADE CHANGES WITHIN 10' OF SWITCHGEAR VAULT. SEE DETAIL D3-A FOR OTHER APPLICABLE NOTES.

| REVISIONS: | | | |
|---|---|---|---|
| REV | DATE | BY | DESCRIPTION |
| 1 | 07/19 | BB | NEW DETAIL GRADING AROUND SWITCH |

APPROVED BY: –
DRAWN BY: –
DATE: –
FILE: –

PAD MOUNT SWITCH GEAR DETAILS

CITY OF ST. GEORGE
ENERGY SERVICES DEPARTMENT
UNDERGROUND STANDARDS

DETAIL
D3-C

# PRIMARY ENCLOSURE (THREE PHASE SHOWN)

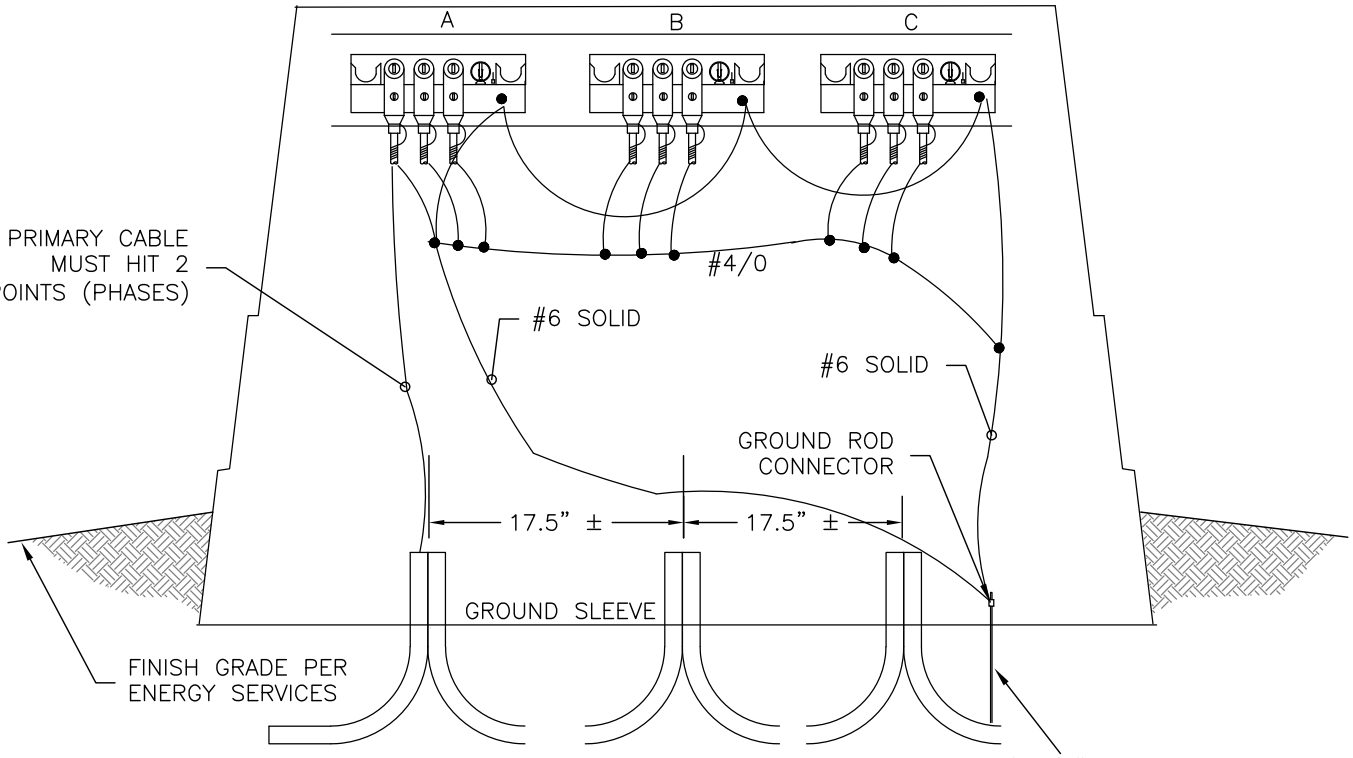


FRONT VIEW

8'x5/8" GROUND ROD. GROUND ROD CLAMPS & CONNECTORS SHALL BE SUPPLIED BY CONTRACTOR. TANK GROUND CONNECTOR SHALL BE SIZED TO FIT 1/0 CU. WIRE.

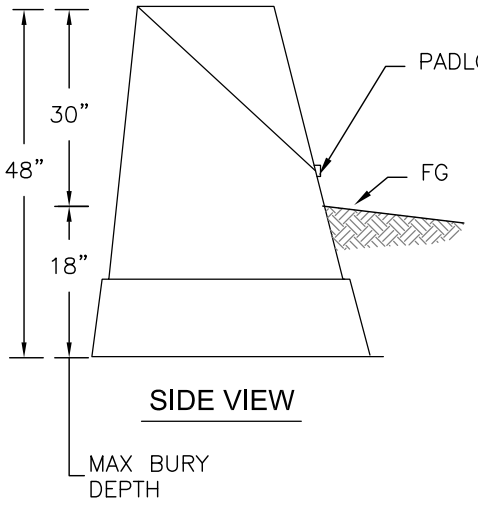


SIDE VIEW

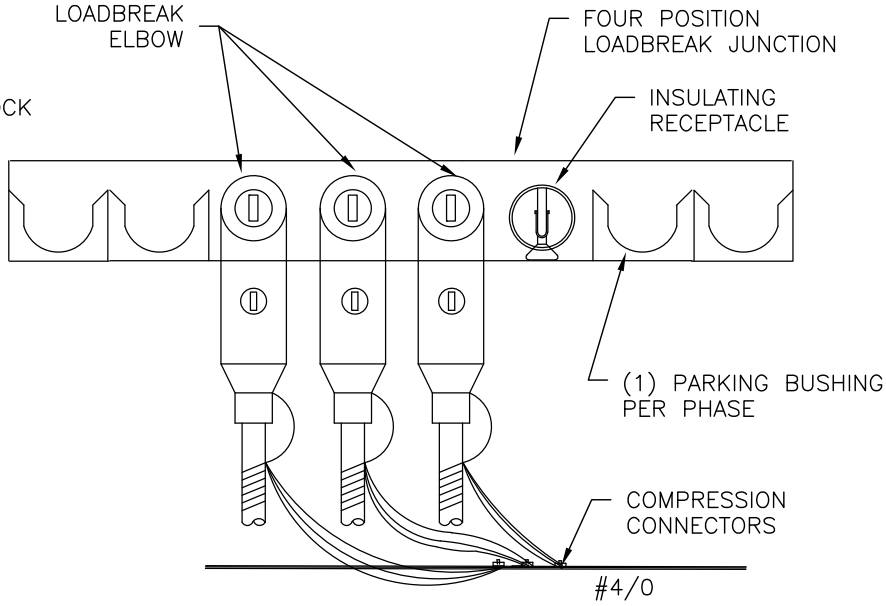


## NOTES:

1. NO ABOVE GROUND IRRIGATION SYSTEMS WITHIN 10' OF ENCLOSURE.

| REVISIONS: | | | |
|---|---|---|---|
| REV | DATE | BY | DESCRIPTION |
| 1 | 07/19 | BB | ADDED DIMENSIONS TO SIDE VIEW |

APPROVED BY: –
DRAWN BY: *RWM*
DATE: –
FILE: –

PRIMARY SECTIONALIZING ENCLOSURE
(THREE PHASE OR SINGLE PHASE)
CITY OF ST. GEORGE
ENERGY SERVICES DEPARTMENT
UNDERGROUND STANDARDS

DETAIL
D4

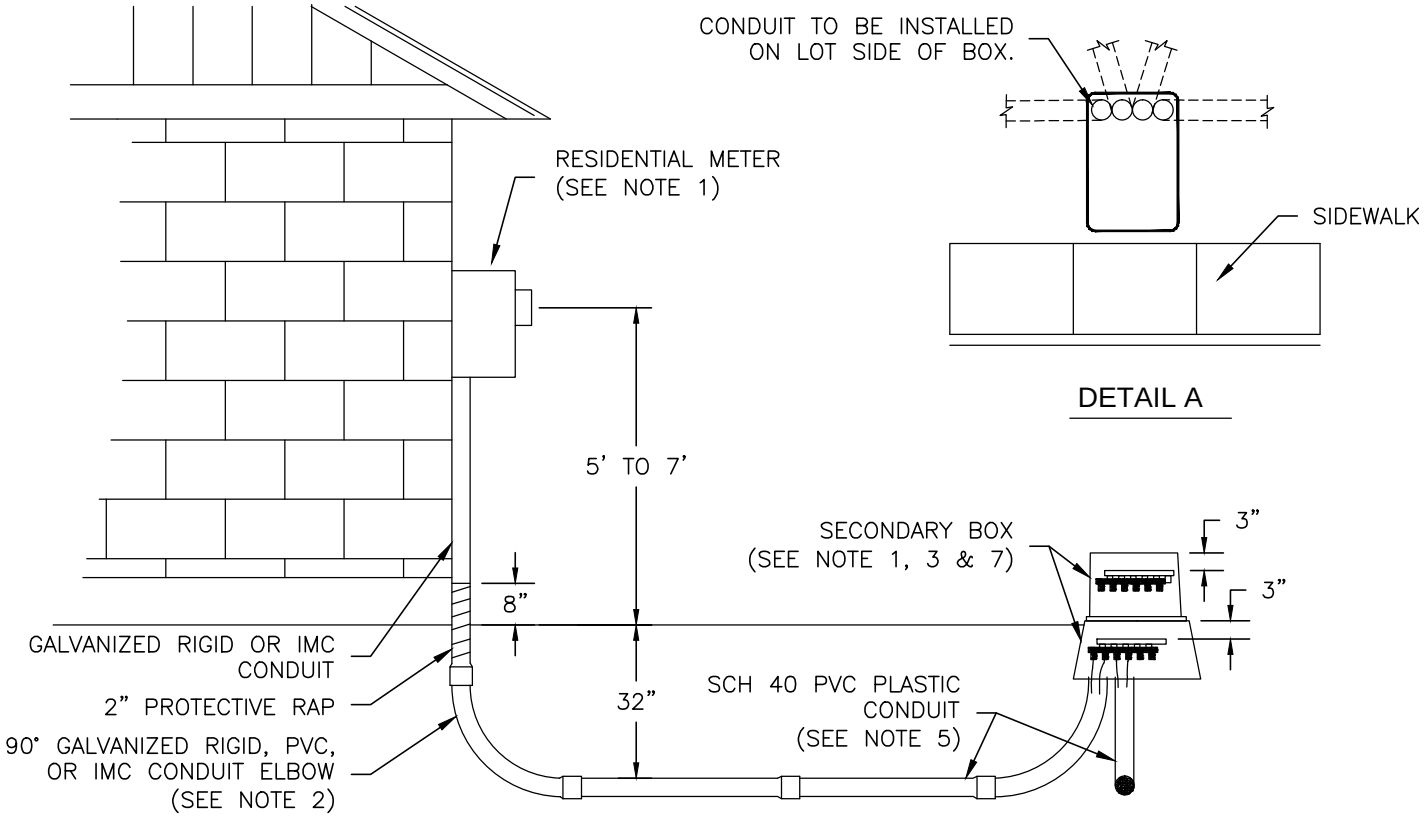


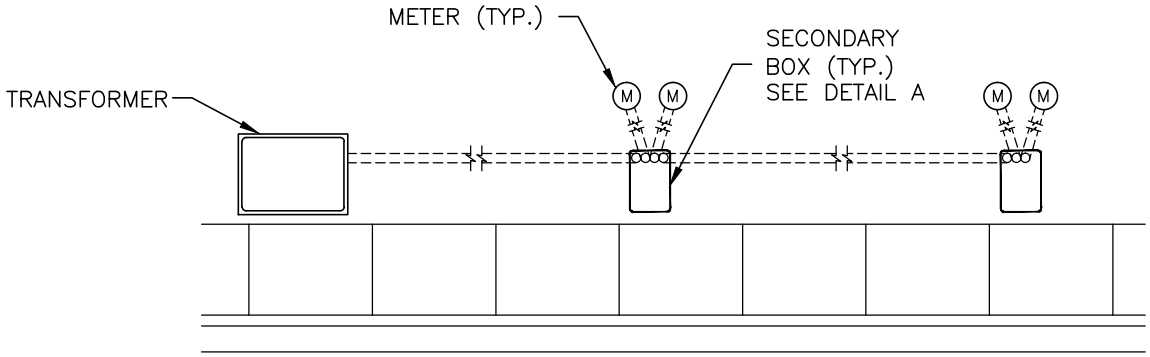


## NOTES:

1. METER MOUNTING PROVISION.

2. MINIMUM RADIUS OF BEND – 18".

3. SERVICE CONDUCTORS TO EXTEND FROM THE METER MOUNTING PROVISION TO THE END OF THE CONDUIT, IN ADDITION, A 5' LENGTH OF CABLE SHALL BE LEFT BEYOND THE END OF CONDUIT FOR THE CITY ENERGY SERVICES TO MAKE IT'S CONNECTIONS. CABLE END TO BE SEALED INSIDE SECONDARY BOX.

4. MIN. CLEARENCE FROM BUS TO LID MUST MAINTAIN 3 INCHES.

5. PLASTIC SCHEDULE 40 CONDUIT TO BE CONTINUOUS FROM THE END OF THE ELBOW ON THE SERVICE RISER TO THE SECONDARY JUNCTION BOX OR TRANSFORMER.

6. METER SHALL BE PLACED AT THE BUILDING'S CLOSEST LOCATION TO THE TRANSFORMER OR SECONDARY BOX APPROVED BY ENERGY SERVICES.

7. SECONDARY JUNCTION BOXES SHALLL BE INSTALLED 6" ABOVE TOP BACK OF CURB (TBC)/FINISHED GRADE.

| REVISIONS: | | | |
|---|---|---|---|
| REV | DATE | BY | DESCRIPTION |
| | | | |
| | | | |
| | | | |

APPROVED BY: –
DRAWN BY: *RWM*
DATE: –
FILE: –

SERVICE REQUIREMENTS
RESIDENTIAL

CITY OF ST. GEORGE
ENERGY SERVICES DEPARTMENT
UNDERGROUND STANDARDS

DETAIL
D5

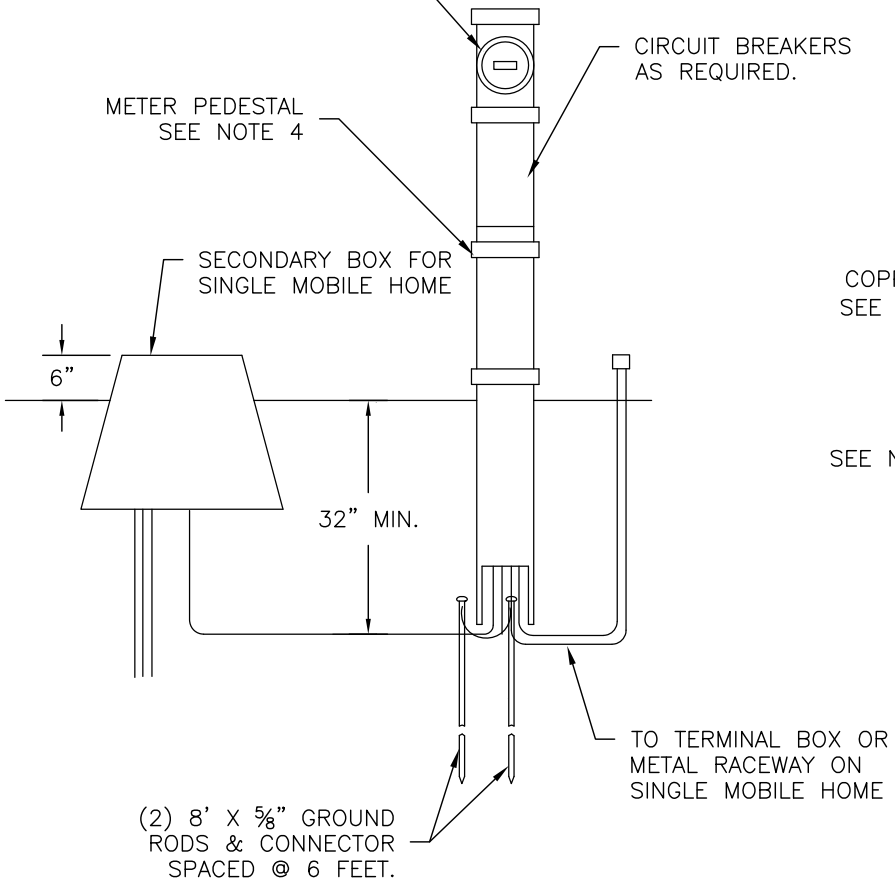


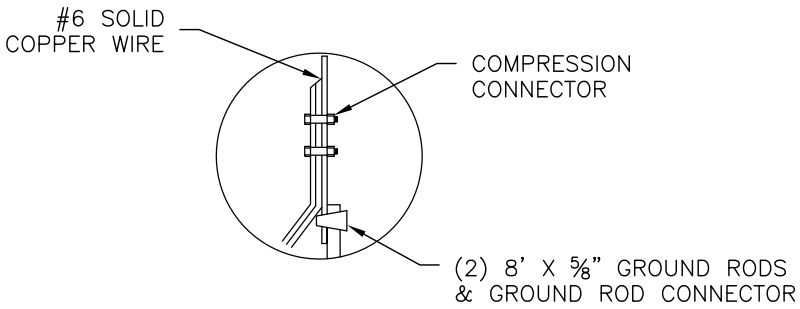


DETAIL A

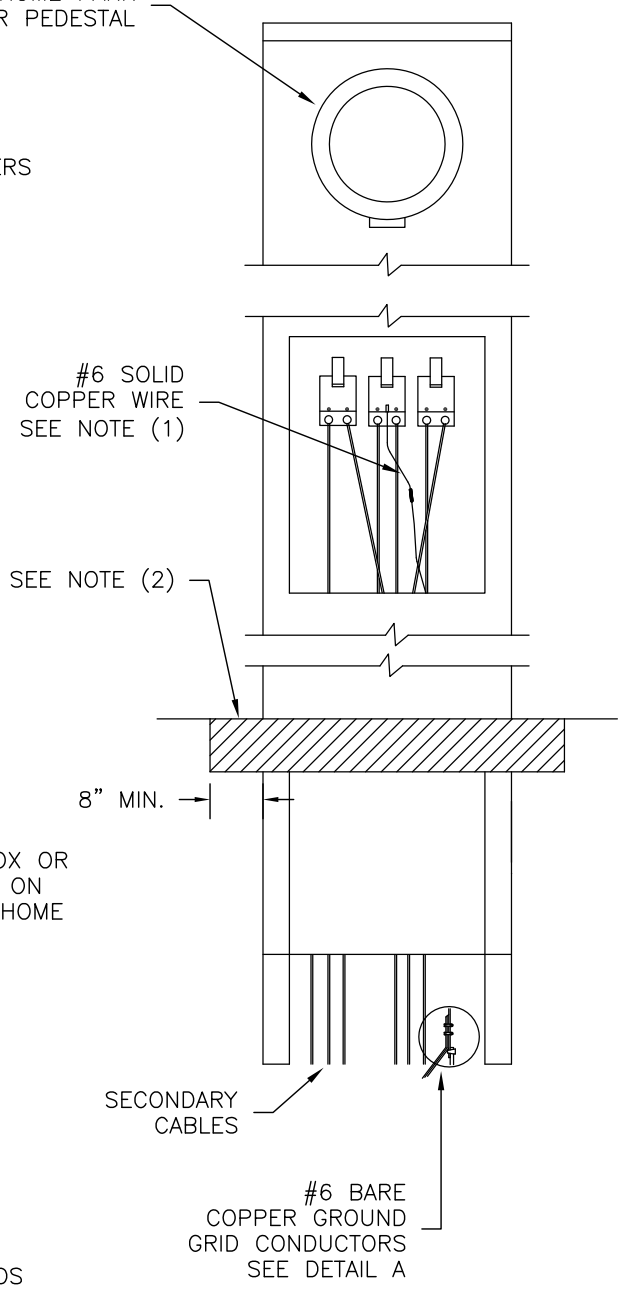


## NOTES:

1. THE SECONDARY NEUTRAL AND GROUND GRID SHALL BE BONDED TOGETHER.
2. OWNER SHALL PROVIDE CONCRETE PAD FOR ADDITIONAL SUPPORT WHEN NEEDED.
3. ALL METAL PARTS (BOXES, CONDUIT, ETC) SHALL BE BONDED TO THE GROUNDING CONDUCTOR.
4. DO NOT USE PEDESTAL AS JUNCTION BOX.
5. GROUND ROD CLAMPS AND CONNECTORS SHALL BE FURNISHED AND INSTALLED BY THE CONTRACTOR.

| REVISIONS: | | | |
|---|---|---|---|
| REV | DATE | BY | DESCRIPTION |
| | | | |
| | | | |
| | | | |

APPROVED BY: –
DRAWN BY: –
DATE: –
FILE: –

SERVICE REQUIREMENTS
MOBILE HOMES & TRAILERS

CITY OF ST. GEORGE
ENERGY SERVICES DEPARTMENT
UNDERGROUND STANDARDS

DETAIL
D6

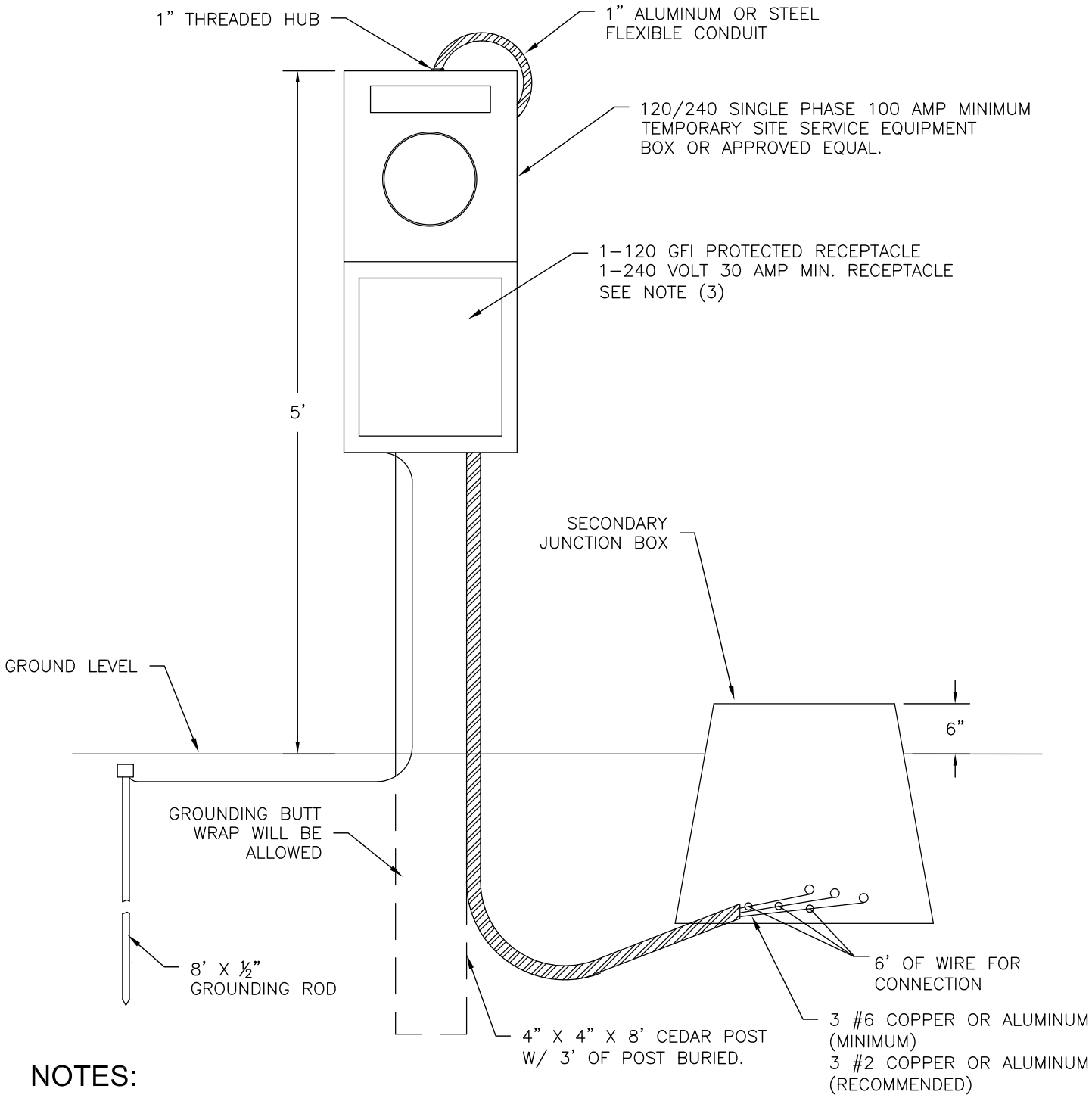


## NOTES:

1. NO OPEN WIRES WILL BE ALLOWED.
2. IF THREE PHASE POWER IS REQUIRED, ENERGY SERVICES ENGINEER APPROVAL IS REQUIRED FOR THE METER BASE.
3. IF MORE RECEPTACLES ARE REQUIRED, 2 MORE GFI RECEPTACLES WILL BE ALLOWED IF HOUSED WITHIN A NEMA 3R ENCLOSURE.
4. GROUND ROD CLAMPS AND CONNECTORS SHALL BE FURNISHED AND INSTALLED BY THE CONTRACTOR
5. TEMP POWER PEDESTAL SHALL BE INSTALLED ON THE LOT THAT HAS BEEN ISSUED THE BUILDING PERMIT.

| REVISIONS: | | | |
|---|---|---|---|
| REV | DATE | BY | DESCRIPTION |
| | | | |
| | | | |
| | | | |

APPROVED BY: –
DRAWN BY: –
DATE: –
FILE: –

UNDERGROUND TEMPORARY POWER

CITY OF ST. GEORGE
ENERGY SERVICES DEPARTMENT
UNDERGROUND STANDARDS

DETAIL
D7

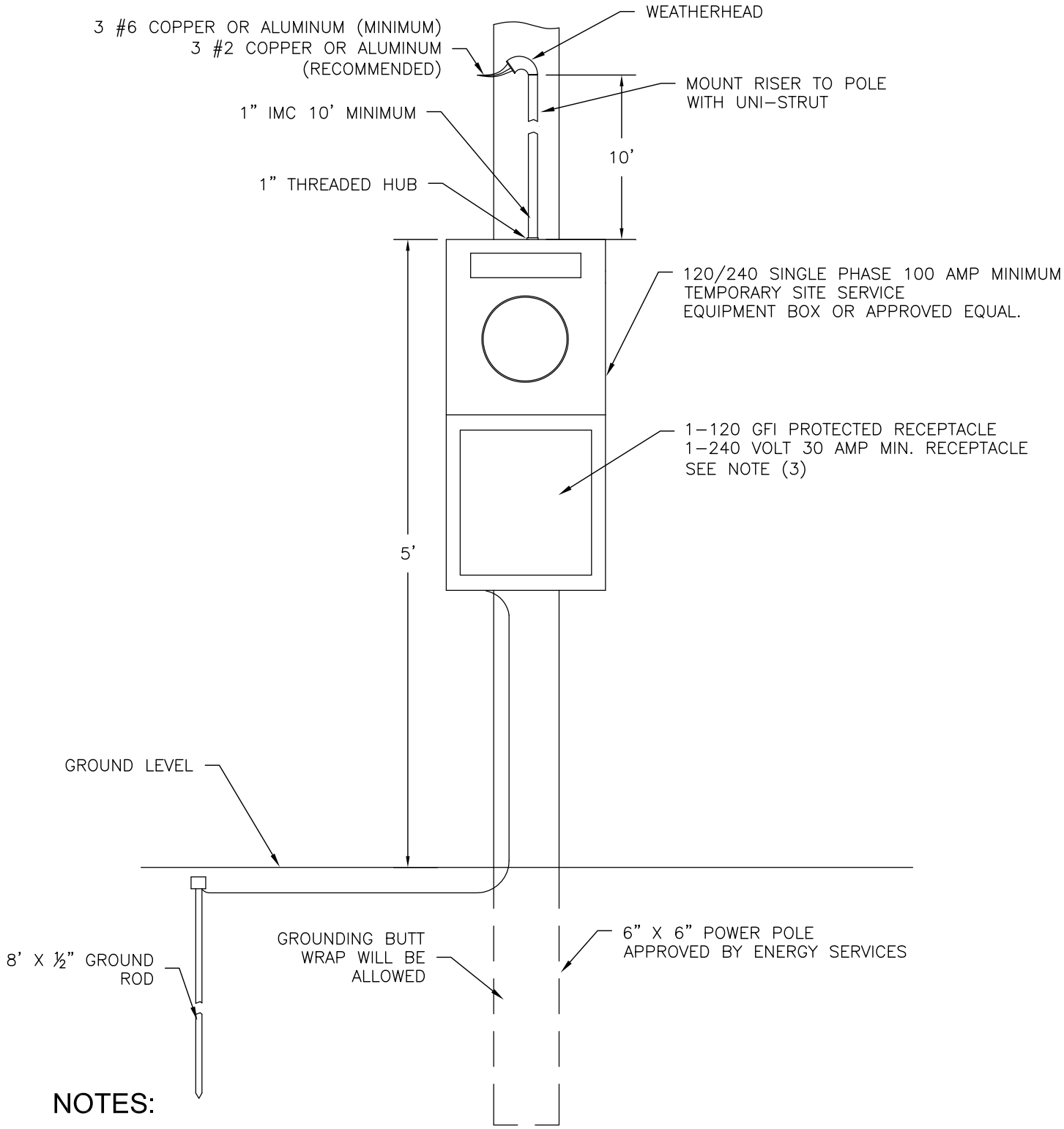


## NOTES:

1. NO OPEN WIRES WILL BE ALLOWED.

2. IF THREE PHASE POWER IS REQUIRED, ENERGY SERVICES ENGINEER APPROVAL IS REQUIRED FOR THE METER BASE.

3. IF MORE RECEPTACLES ARE REQUIRED, 2 MORE GFI RECEPTACLES WILL BE ALLOWED IF HOUSED WITHIN A NEMA 3R ENCLOSURE.

4. GROUND ROD CLAMPS AND CONNECTORS SHALL BE FURNISHED AND INSTALLED BY THE CONTRACTOR.

| REVISIONS: | | | |
|---|---|---|---|
| REV | DATE | BY | DESCRIPTION |
| | | | |
| | | | |
| | | | |

APPROVED BY: –
DRAWN BY: –
DATE: –
FILE: –

OVERHEAD TEMPORARY POWER

CITY OF ST. GEORGE
ENERGY SERVICES DEPARTMENT
UNDERGROUND STANDARDS

DETAIL

D8

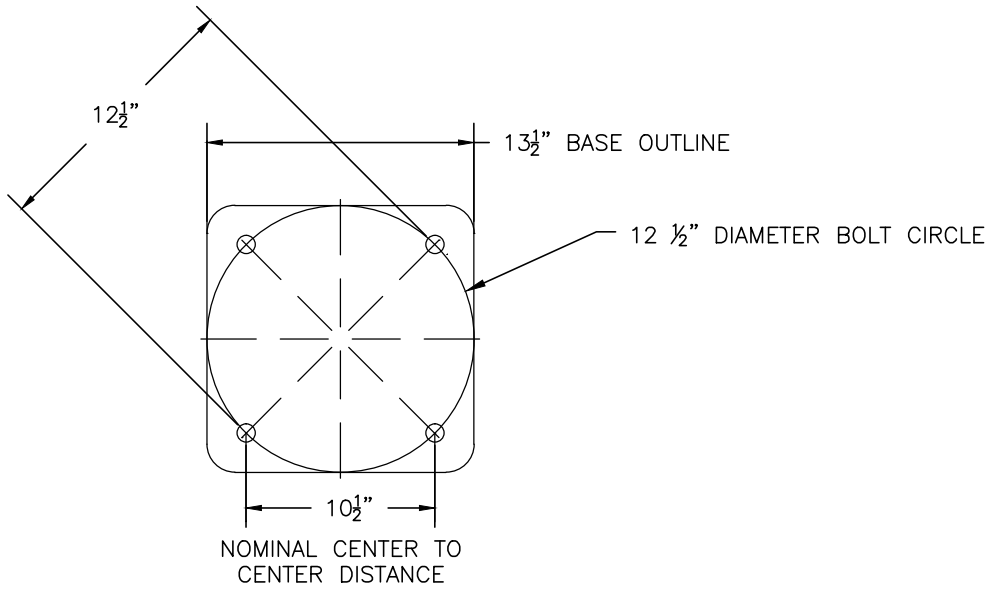


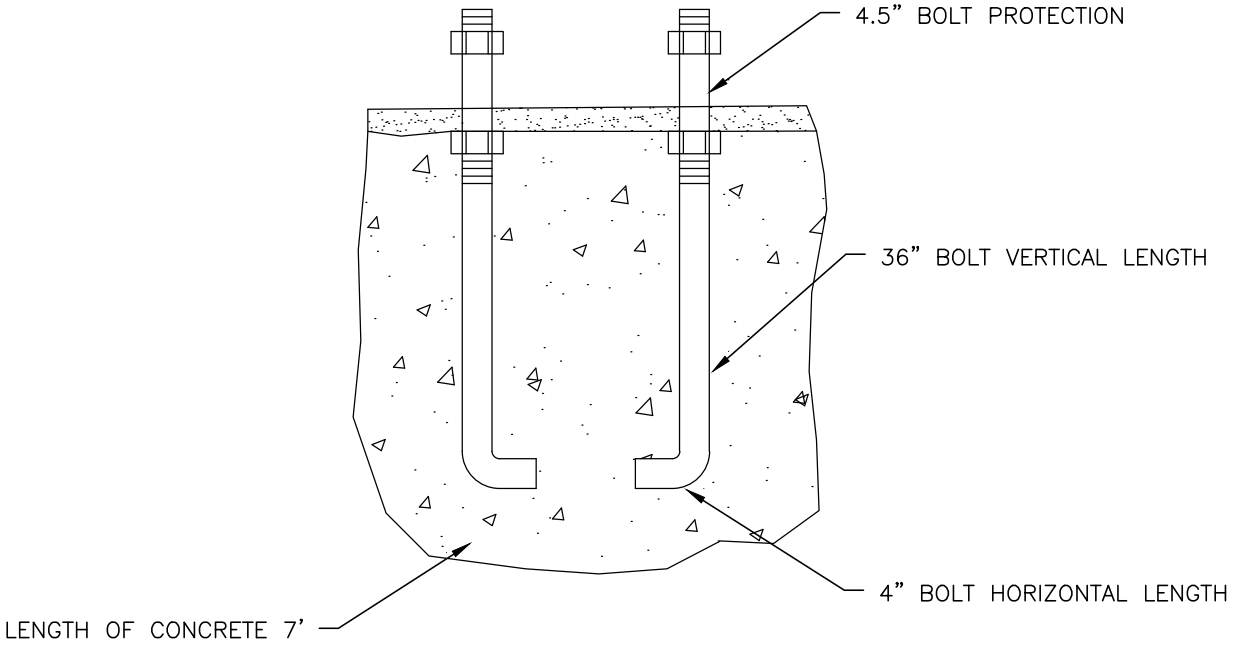


| REVISIONS: | | | |
|---|---|---|---|
| REV | DATE | BY | DESCRIPTION |
| | | | |
| | | | |
| | | | |

APPROVED BY: –
DRAWN BY: –
DATE: –
FILE: –

ANCHOR BOLT TEMPLATE DATA
35' & 40' STREET LIGHTS

CITY OF ST. GEORGE
ENERGY SERVICES DEPARTMENT
UNDERGROUND STANDARDS

DETAIL
D9

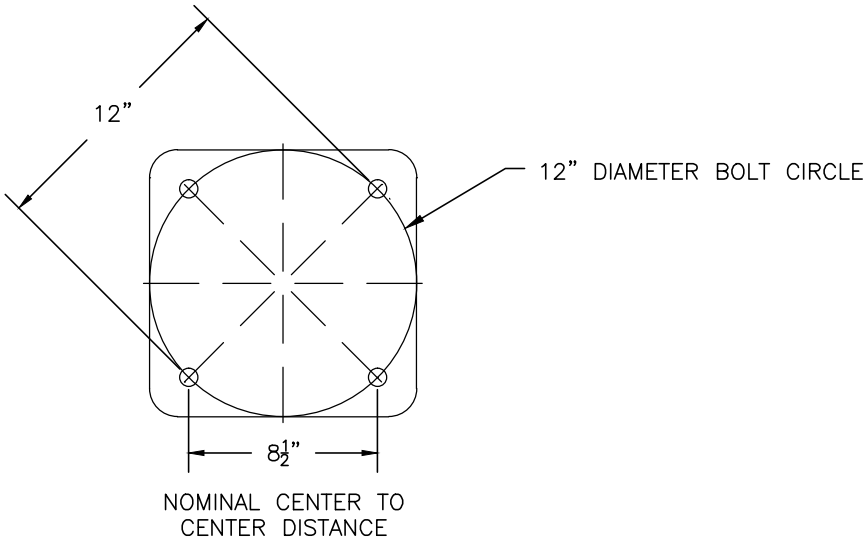


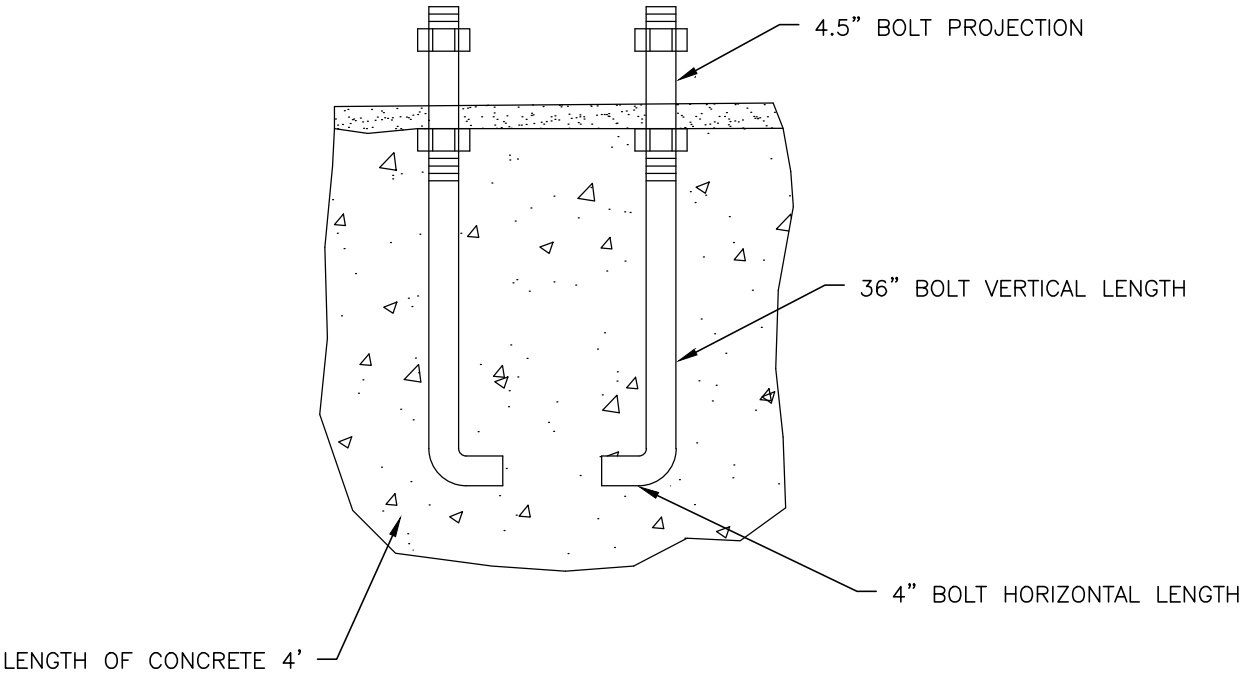


| REVISIONS: | | | |
|---|---|---|---|
| REV | DATE | BY | DESCRIPTION |
| | | | |
| | | | |
| | | | |

APPROVED BY: –
DRAWN BY: –
DATE: –
FILE: –

ANCHOR BOLT TEMPLATE DATA
HADCO/COOPER STREET LIGHTS

CITY OF ST. GEORGE
ENERGY SERVICES DEPARTMENT
UNDERGROUND STANDARDS

DETAIL
D10

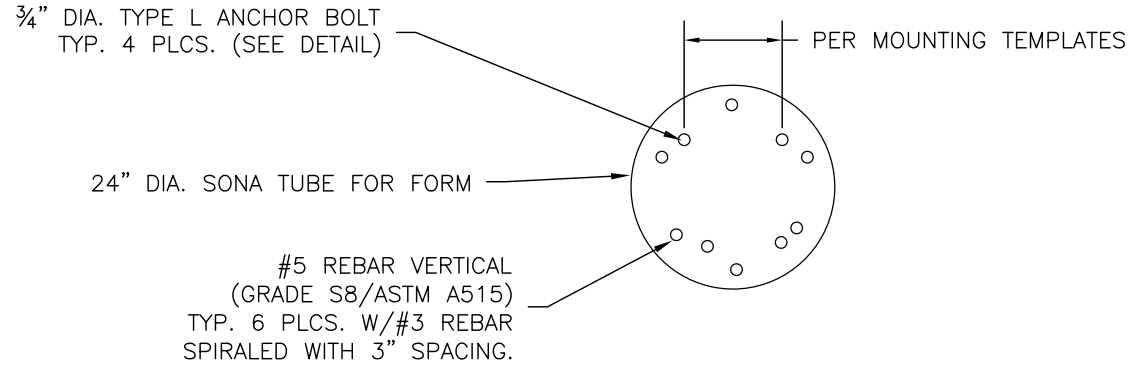


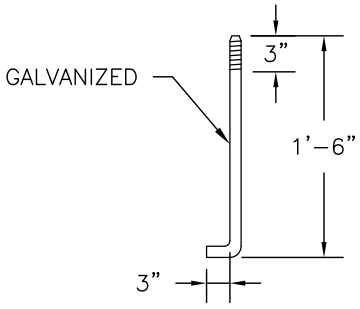


DETAIL A

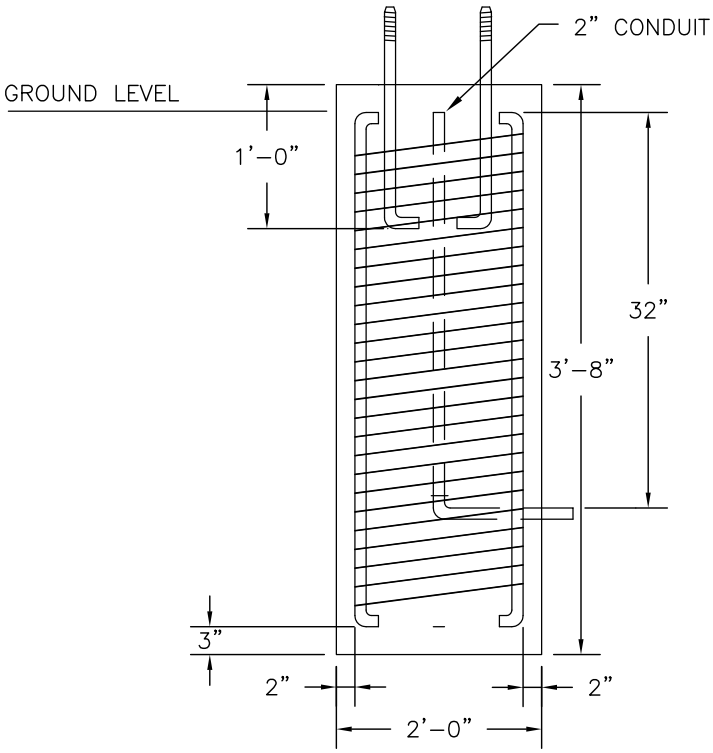


## NOTES:

1. MAXIMUM DESIGN FOR 14' POLE.
2. USE 3,000 PSI CONCRETE (@ 28 DAY STRENGTH).
3. CONCRETE SHALL BE PLACED AS PER ASTM METHODS.
4. ANCHOR BOLTS SHALL CONFORM TO LENGTHS AS SHOWN ABOVE UNLESS OTHERWISE NOTED.
5. DEVELOPED LENGTH IS MEASURED ON CENTERLINE OF BOLT.
6. BOLTS AND NUTS SHALL CONFORM TO ASTM A38 AND A387 – LATEST REVISION.
7. NUTS SHALL BE AMERICAN STANDARD, HEXAGONAL, HEAVY, WITH UNC-28 THREAD AND SHALL BE PROVIDED WITH BOLTS UNLESS OTHERWISE NOTED.
8. BOLT THREAD SHALL BE UNC-2A.
9. HEAT BOLT TO A TEMPERATURE NOT EXCEEDING 1,958° F AT LEAST 3" BE;YOND BEND ZONE IF HOT BEND IS REQUIRED. ALLOW BOLT TO AIR COOL.
10. ADDENDUM #5, DECEMBER 16, 1991. WHEN A STREET LIGHT IS INSTALLED, THE CONTRACTOR WILL BE RESPONSIBLE TO PLACE A NON SHRINK GROUT MATERIAL BETWEEN THE LIGHT POLE BASE PLATE AND FOUNDATION. BOLT COVERS WILL ALSO BE REQUIRED.

REVISIONS:

| REV | DATE | BY | DESCRIPTION |
|---|---|---|---|
| 1 | 11/13 | BB | CHANGED VERTICAL STEEL REQ. |

APPROVED BY: –
DRAWN BY: –
DATE: –
FILE:

FOOTING SPECIFICATIONS
HISTORICAL STREET LIGHTS

CITY OF ST. GEORGE
ENERGY SERVICES DEPARTMENT
UNDERGROUND STANDARDS

DETAIL
D11

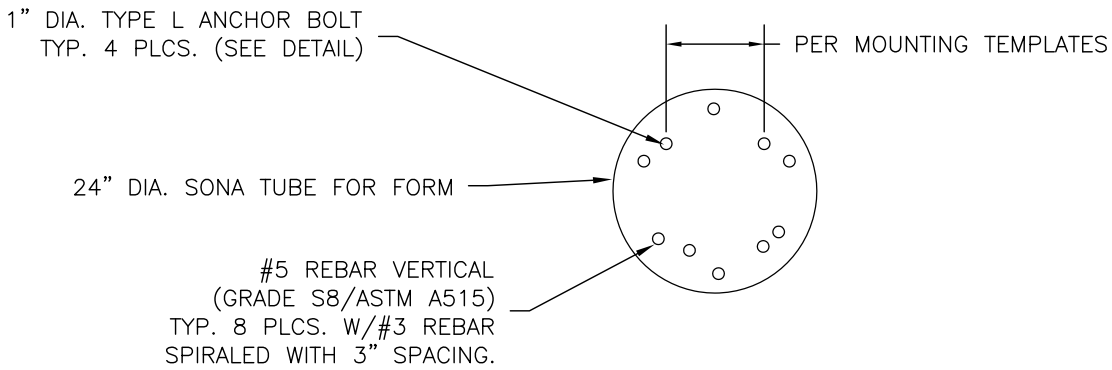


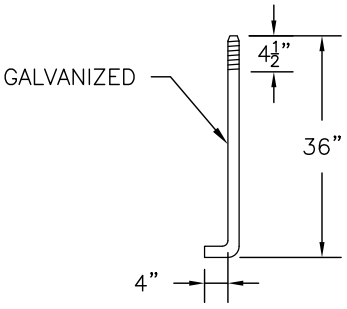


DETAIL A

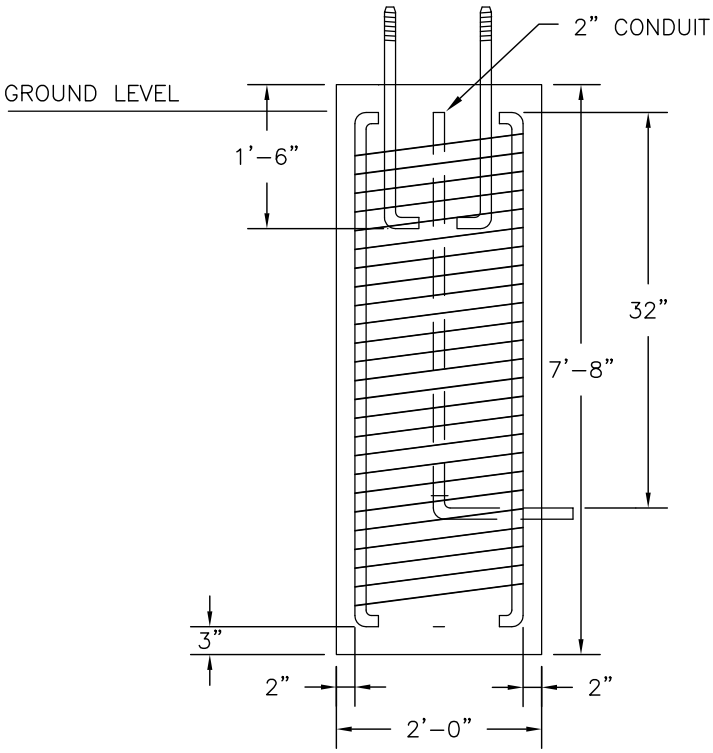


## NOTES:

1. MAXIMUM DESIGN FOR 40' POLE.
2. USE 3,000 PSI CONCRETE (@ 28 DAY STRENGTH).
3. CONCRETE SHALL BE PLACED AS PER ASTM METHODS.
4. ANCHOR BOLTS SHALL CONFORM TO LENGTHS AS SHOWN ABOVE UNLESS OTHERWISE NOTED.
5. DEVELOPED LENGTH IS MEASURED ON CENTERLINE OF BOLT.
6. BOLTS AND NUTS SHALL CONFORM TO ASTM A38 AND A387 – LATEST REVISION.
7. NUTS SHALL BE AMERICAN STANDARD, HEXAGONAL, HEAVY, WITH UNC–28 THREAD AND SHALL BE PROVIDED WITH BOLTS UNLESS OTHERWISE NOTED.
8. BOLT THREAD SHALL BE UNC–2A.
9. HEAT BOLT TO A TEMPERATURE NOT EXCEEDING 1,958° F AT LEAST 3" BE;YOND BEND ZONE IF HOT BEND IS REQUIRED. ALLOW BOLT TO AIR COOL.
10. ADDENDUM #5, DECEMBER 16, 1991. WHEN A STREET LIGHT IS INSTALLED, THE CONTRACTOR WILL BE RESPONSIBLE TO PLACE A NON SHRINK GROUT MATERIAL BETWEEN THE LIGHT POLE BASE PLATE AND FOUNDATION. BOLT COVERS WILL ALSO BE REQUIRED.

REVISIONS:

| REV | DATE | BY | DESCRIPTION |
|---|---|---|---|
| 1 | 11/13 | BB | CHANGED VERTICAL STEEL REQ. |

APPROVED BY: –
DRAWN BY: –
DATE: –
FILE:

FOOTING SPECIFICATIONS
COBRA HEAD STREET LIGHTS

CITY OF ST. GEORGE
ENERGY SERVICES DEPARTMENT
UNDERGROUND STANDARDS

DETAIL
D12

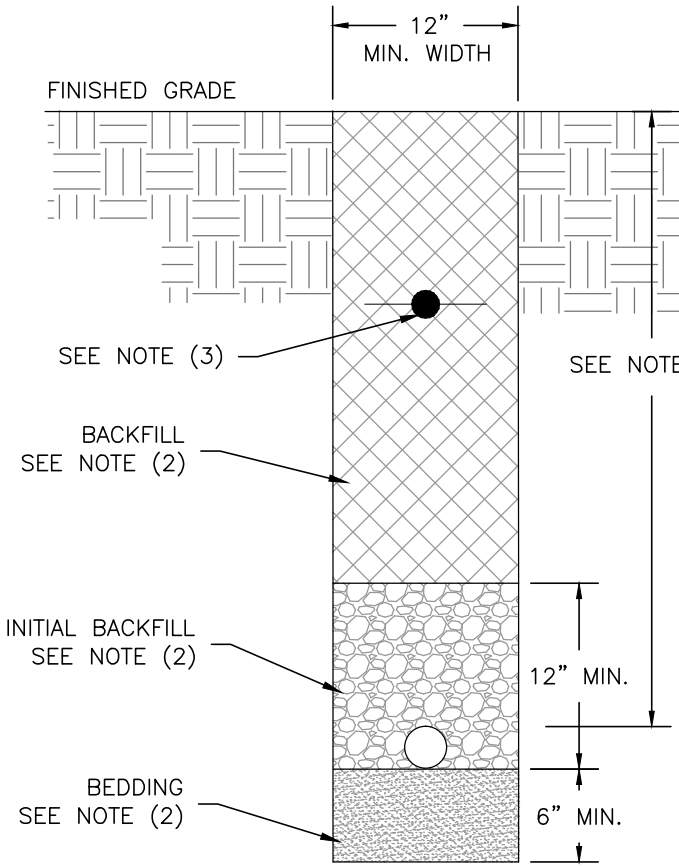


END VIEW

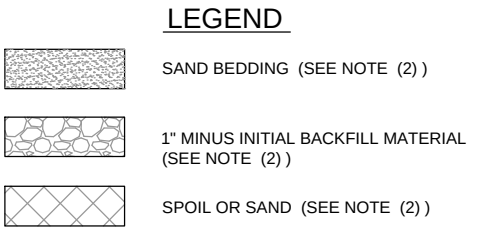


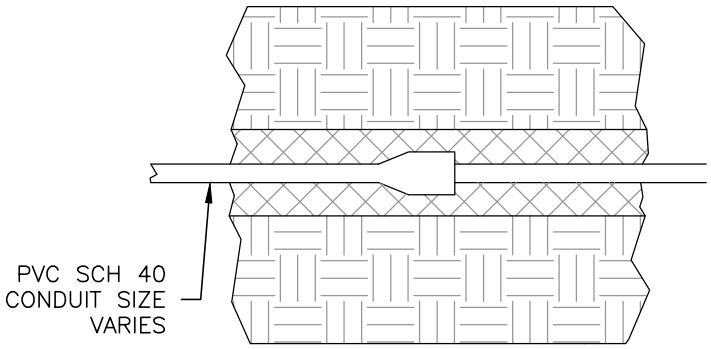


TOP VIEW

## NOTES:

1. THE MINIMUM ALLOWABLE BURY DEPTH FOR CONDUIT IS 42" FOR 15KV PRIMARY CONDUCTORS AND 32" FOR 600 VOLT SECONDARY CONDUCTORS MEASURED FROM FINISHED GRADE TO TOP OF PIPE.

2. 6" OF SAND BEDDING SHALL BE INSTALLED UNDER THE CONDUIT. AT LEAST 12" OF 1" MINUS MATERIAL SHALL BE PLACED AROUND THE CONDUITS. THE REMAINING BACKFILL MATERIAL SHALL BE SOIL REMOVED FROM THE TRENCH UNLESS SPECIFIC BACKFILL REQUIREMENTS EXIST.

3. WARNING TAP SHALL BE INSTALLED ABOVE THE CONDUIT ZONE. APPROXIMATELLY 6" TO 11" BELOW FINISHED GRADE.

4. IF MORE THAN ONE LAYER IS INSTALLED A 6" SEPARATION WILL BE REQUIRED. ALSO, THE DEPTHS WILL BE MEASURED TO TOP LAYER.

5. SCHEDULE 40 PVC CAN BE SUBSTITUTED WITH HDPE CONTINUOUS CONDUIT WITH ENERGY SERVICES ENGEER APPROVAL.

6. ENCASE CONDUIT IN CONCRETE WHEN CONDUIT IS NOT INSTALLED AT THE REQUIRED MINIMUM DEPTH. IN ADDITION, 3" PRIMARY SWEEPS SHALL BE CONCRETE ENCASED.

7. ALL BACKFILL PLACED OVER THE PLASTIC CONDUIT MUST BE COMPACTED PER THE CITY OF ST. GEORGE STANDARD SPECIFICATIONS FOR DESIGN AND CONSTRUCTION.

| REVISIONS: | | | |
|---|---|---|---|
| REV | DATE | BY | DESCRIPTION |
| | | | |
| | | | |
| | | | |

APPROVED BY: –
DRAWN BY: –
DATE: –
FILE: –

CONDUIT INSTALLATION
SINGLE CONDUIT

CITY OF ST. GEORGE
ENERGY SERVICES DEPARTMENT
UNDERGROUND STANDARDS

DETAIL
D13

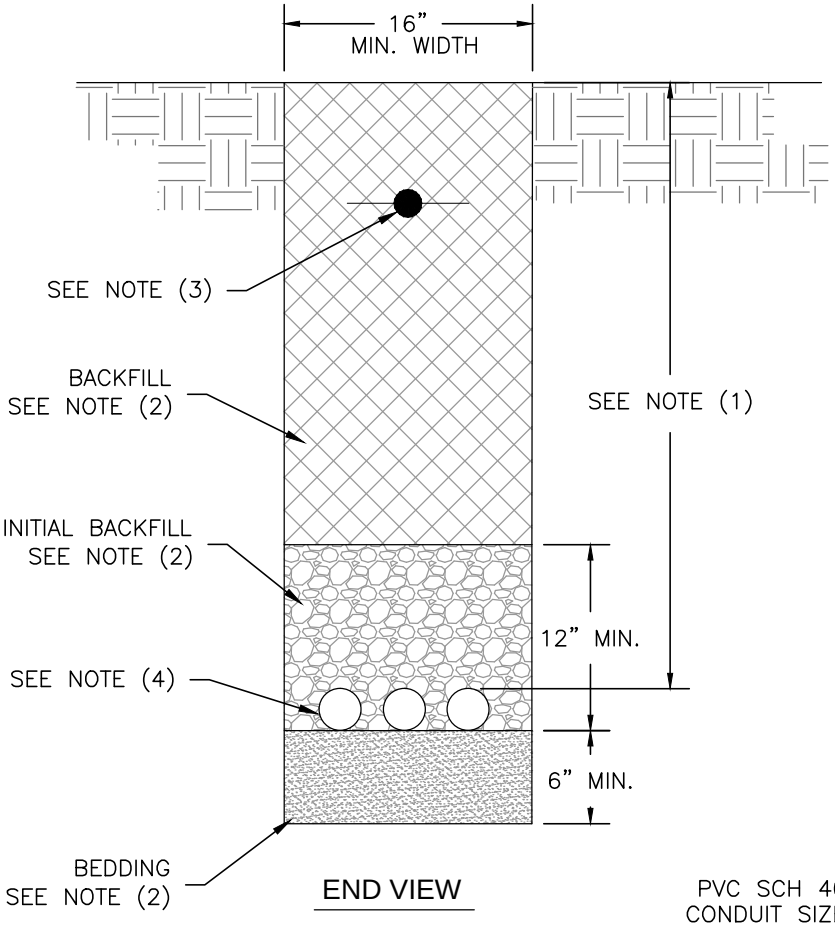


END VIEW

## LEGEND

SAND BEDDING (SEE NOTE (2) )

1" MINUS INITIAL BACKFILL MATERIAL (SEE NOTE (2) )

SPOIL OR SAND (SEE NOTE (2) )

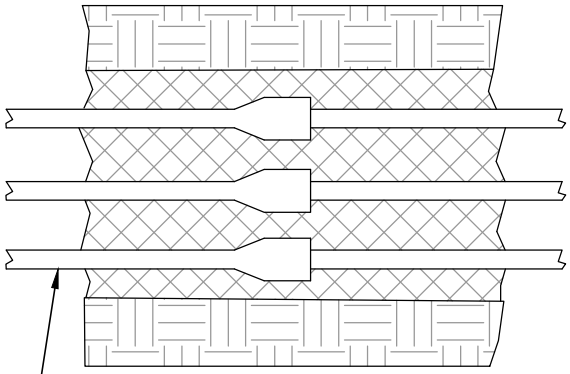


TOP VIEW

## NOTES:

1. THE MINIMUM ALLOWABLE BURY DEPTH FOR CONDUIT IS 42" FOR 15KV PRIMARY CONDUCTORS AND 32" FOR 600 VOLT SECONDARY CONDUCTORS MEASURED FROM FINISHED GRADE TO TOP OF PIPE.

2. 6" OF SAND BEDDING SHALL BE INSTALLED UNDER THE CONDUIT. AT LEAST 12" OF 1" MINUS MATERIAL SHALL BE PLACED AROUND THE CONDUITS. THE REMAINING BACKFILL MATERIAL SHALL BE SOIL REMOVED FROM THE TRENCH UNLESS SPECIFIC BACKFILL REQUIREMENTS EXIST.

3. WARNING TAP SHALL BE INSTALLED ABOVE THE CONDUIT ZONE. APPROXIMATELLY 6" TO 11" BELOW FINISHED GRADE.

4. CONDUITS SHALL BE SPACED 3" EDGE-TO-EDGE.

5. IF MORE THAN ONE LAYER IS INSTALLED A 6" SEPARATION WILL BE REQUIRED. ALSO, THE DEPTHS WILL BE MEASURED TO TOP LAYER.

6. SCHEDULE 40 PVC CAN BE SUBSTITUTED WITH HDPE CONTINUOUS CONDUIT WITH ENERGY SERVICES ENGEER APPROVAL.

7. ENCASE CONDUIT IN CONCRETE WHEN CONDUIT IS NOT INSTALLED AT THE REQUIRED MINIMUM DEPTH. IN ADDITION, 3" PRIMARY SWEEPS SHALL BE CONCRETE ENCASED.

8. ALL BACKFILL PLACED OVER THE PLASTIC CONDUIT MUST BE COMPACTED PER THE CITY OF ST. GEORGE STANDARD SPECIFICATIONS FOR DESIGN AND CONSTRUCTION.

| REVISIONS: | | | |
|---|---|---|---|
| REV | DATE | BY | DESCRIPTION |
| | | | |
| | | | |
| | | | |

APPROVED BY: –
DRAWN BY: –
DATE: –
FILE: –

CONDUIT INSTALLATION
MULTIPLE CONDUIT

CITY OF ST. GEORGE
ENERGY SERVICES DEPARTMENT
UNDERGROUND STANDARDS

DETAIL
D14

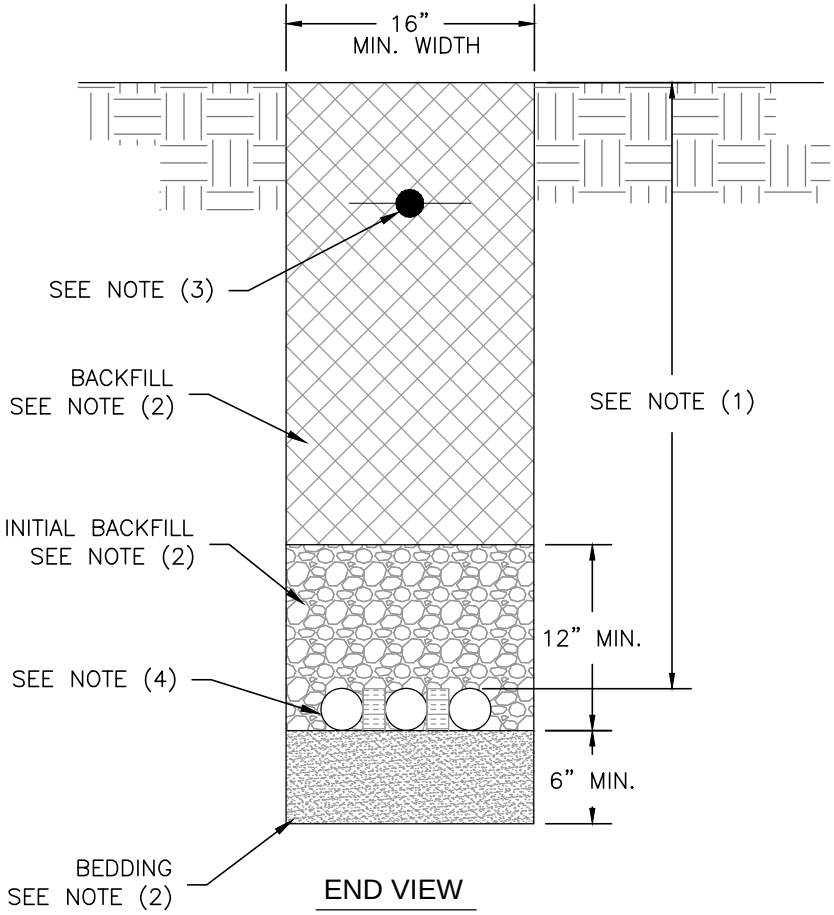


END VIEW

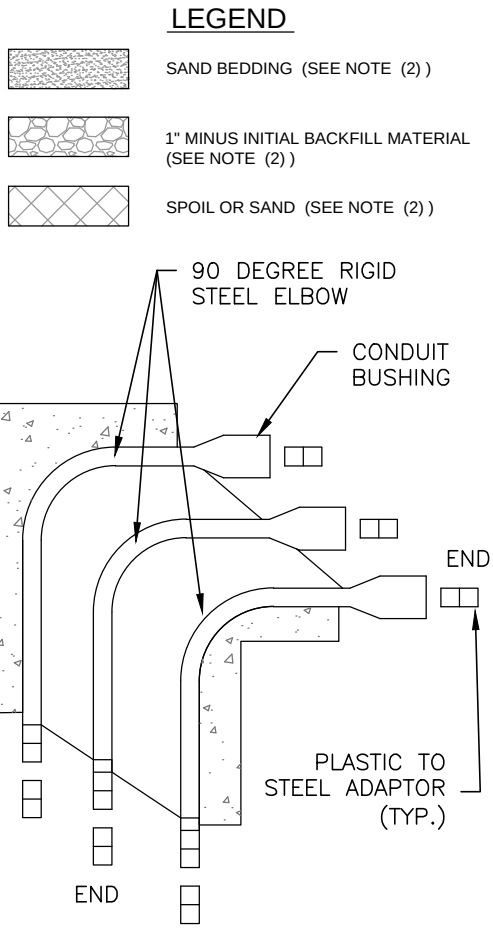


TOP VIEW

## NOTES:

1. THE MINIMUM ALLOWABLE BURY DEPTH FOR CONDUIT IS 42" FOR 15KV PRIMARY CONDUCTORS AND 32" FOR 600 VOLT SECONDARY CONDUCTORS MEASURED FROM FINISHED GRADE TO TOP OF PIPE.

2. 6" OF SAND BEDDING SHALL BE INSTALLED UNDER THE CONDUIT. AT LEAST 12" OF 1" MINUS MATERIAL SHALL BE PLACED AROUND THE CONDUITS. THE REMAINING BACKFILL MATERIAL SHALL BE SOIL REMOVED FROM THE TRENCH UNLESS SPECIFIC BACKFILL REQUIREMENTS EXIST.

3. WARNING TAP SHALL BE INSTALLED ABOVE THE CONDUIT ZONE. APPROXIMATELLY 6" TO 11" BELOW FINISHED GRADE.

4. SPACING BETWEEN CONDUITS SHALL BE 1–½" FOR 2" CONDUITS, AND 3" FOR 3" AND 4" CONDUITS. WOOD SHALL BE WEDGED BETWEEN CONDUITS TO MAINTAIN CONDUIT SEPARATION.

5. IF MORE THAN ONE LAYER IS INSTALLED A 6" SEPARATION WILL BE REQUIRED. ALSO, THE DEPTHS WILL BE MEASURED TO TOP LAYER.

6. SCHEDULE 40 PVC CAN BE SUBSTITUTED WITH HDPE CONTINUOUS CONDUIT WITH ENERGY SERVICES ENGEER APPROVAL.

7. ENCASE CONDUIT IN CONCRETE WHEN CONDUIT IS NOT INSTALLED AT THE REQUIRED MINIMUM DEPTH. IN ADDITION, 3" PRIMARY SWEEPS SHALL BE CONCRETE ENCASED.

8. ALL BACKFILL PLACED OVER THE PLASTIC CONDUIT MUST BE COMPACTED PER THE CITY OF ST. GEORGE STANDARD SPECIFICATIONS FOR DESIGN AND CONSTRUCTION.

| REVISIONS: | | | |
|---|---|---|---|
| REV | DATE | BY | DESCRIPTION |
| | | | |
| | | | |
| | | | |

APPROVED BY: –
DRAWN BY: –
DATE: –
FILE: –

90 DEGREE STEEL CONDUIT ELBOW

CITY OF ST. GEORGE
ENERGY SERVICES DEPARTMENT
UNDERGROUND STANDARDS

DETAIL
D15

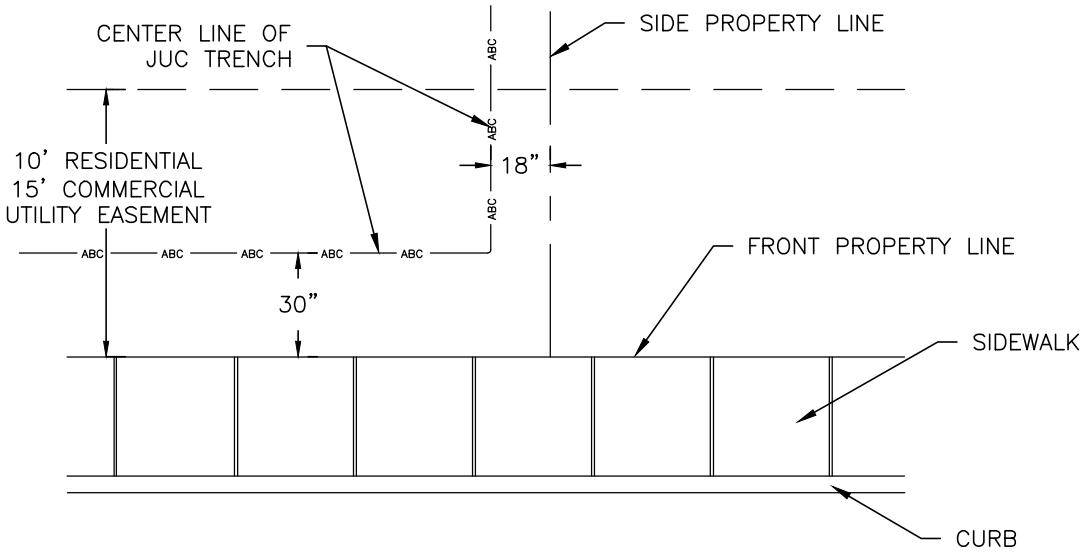


TRENCH LOCATION

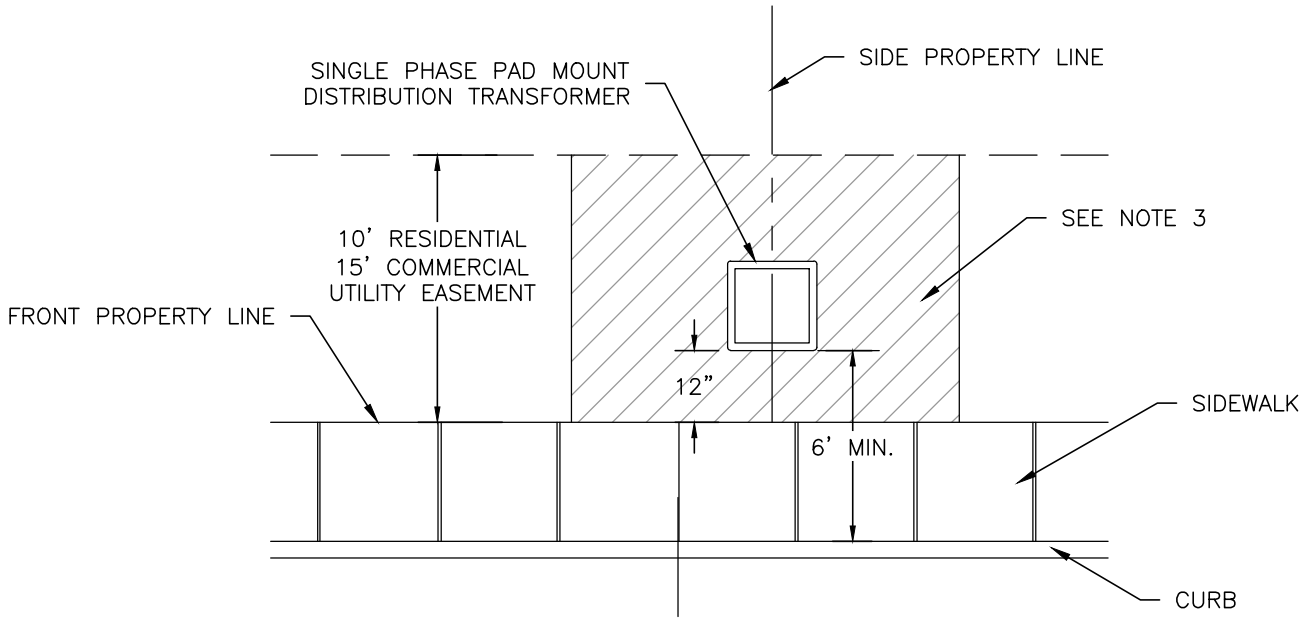


PAD MOUNT TRANSFORMER LOCATION

## NOTES:

1. INSTALL TRANSFORMER 12” BEHIND SIDEWALK. IF SIDEWALK IS NOT REQUIRED, EQUIPMENT IS TO BE PLACED 6’ (SIX FEET) MINIMUM BEHIND CURB.

2. ALL POWER EQUIPMENT (I.E. TRANSFORMERS, SECONDARY BOXES ETC.) SHALL BE INSTALLED PER JUC STANDARDS.

3. NO ABOVE GROUND IRRIGATION SYSTEM WITHIN 10’ OF TRANSFORMER PAD. XEROSCAPE LANDSCAPING REQUIRED AROUND TRANSFORMER.

| REVISIONS: | | | |
|---|---|---|---|
| REV | DATE | BY | DESCRIPTION |
| | | | |
| | | | |
| | | | |

APPROVED BY: –
DRAWN BY: –
DATE: –
FILE: –

PAD MOUNT TRANS. & TRENCH
FRONT LOT LINE LOCATION

CITY OF ST. GEORGE
ENERGY SERVICES DEPARTMENT
UNDERGROUND STANDARDS

DETAIL
D16

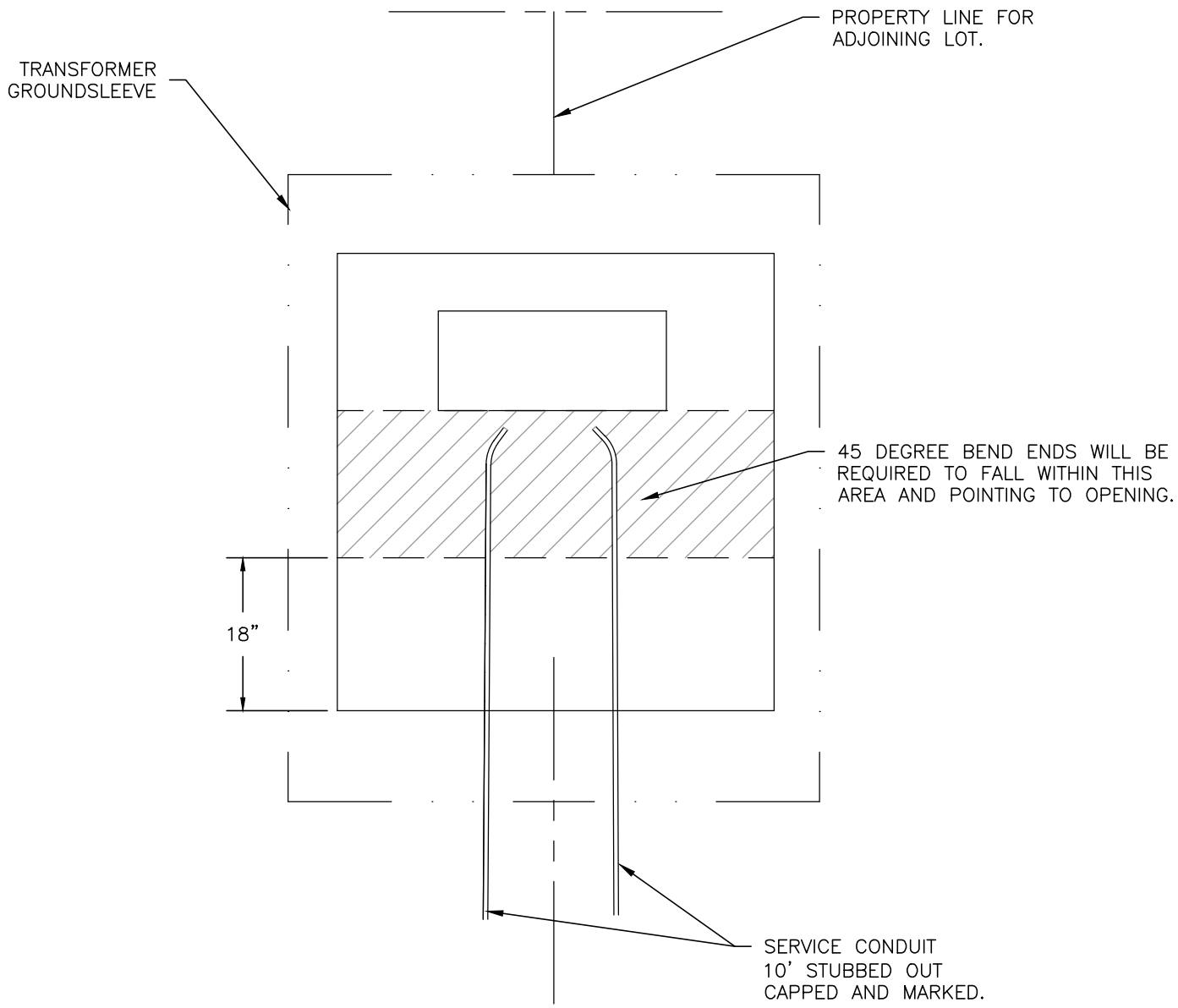


| REVISIONS: | | | |
|---|---|---|---|
| REV | DATE | BY | DESCRIPTION |
| | | | |
| | | | |
| | | | |

APPROVED BY: –
DRAWN BY: –
DATE: –
FILE: –

ADJOINING LOT CONDUIT DETAIL
SINGLE PHASE TRANSFORMER

CITY OF ST. GEORGE
ENERGY SERVICES DEPARTMENT
UNDERGROUND STANDARDS

DETAIL
D17

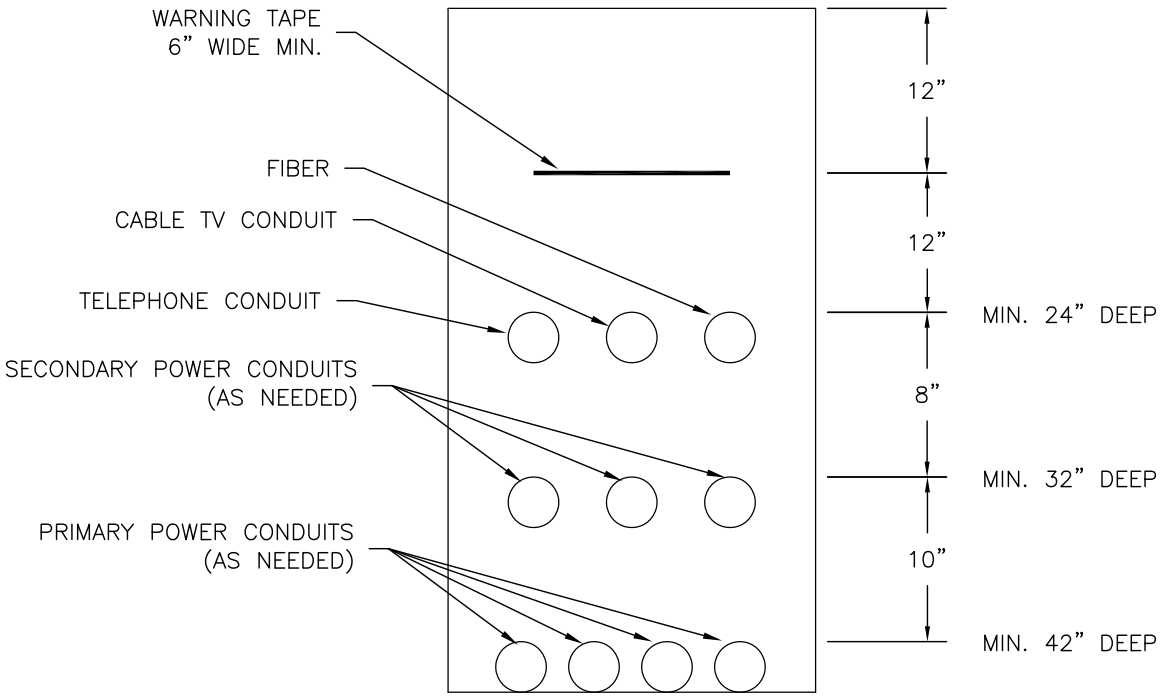


## TYPICAL JOINT TRENCH DETAIL

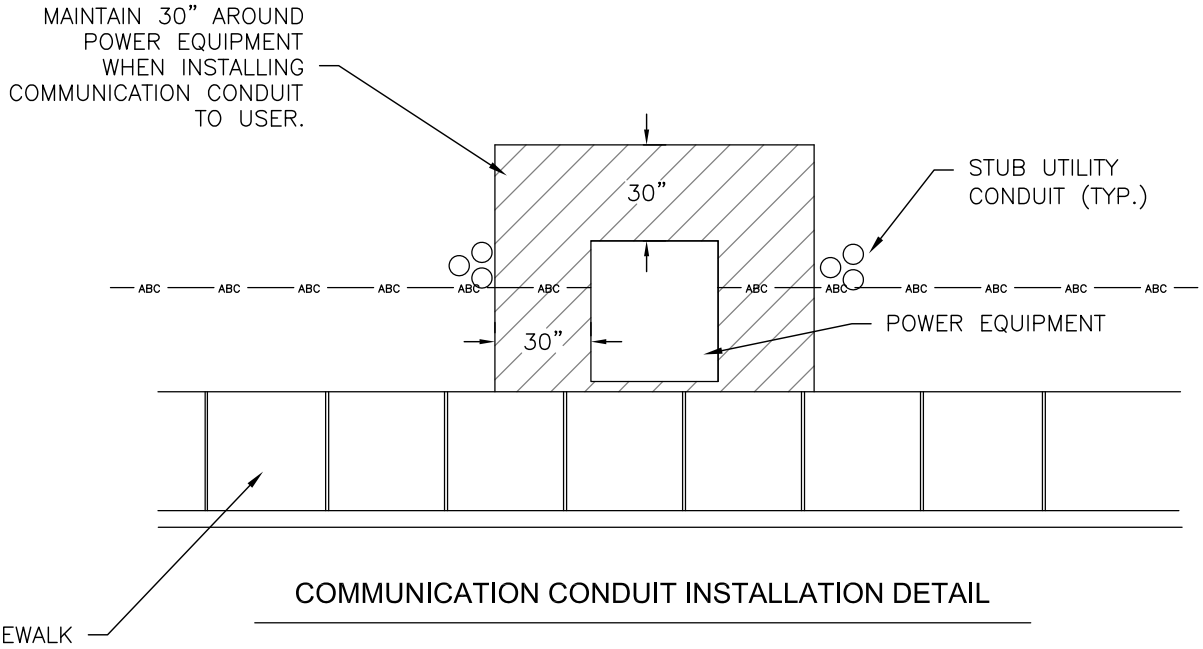


## COMMUNICATION CONDUIT INSTALLATION DETAIL

| REVISIONS: | | | |
|---|---|---|---|
| REV | DATE | BY | DESCRIPTION |
| 1 | 07/19 | BB | ADDED PRIMARY CONDUIT TO DETAIL |

APPROVED BY: –
DRAWN BY: –
DATE: –
FILE: –

TYPICAL JOINT UTILITY TRENCH DETAIL

CITY OF ST. GEORGE
ENERGY SERVICES DEPARTMENT
UNDERGROUND STANDARDS

DETAIL
D18

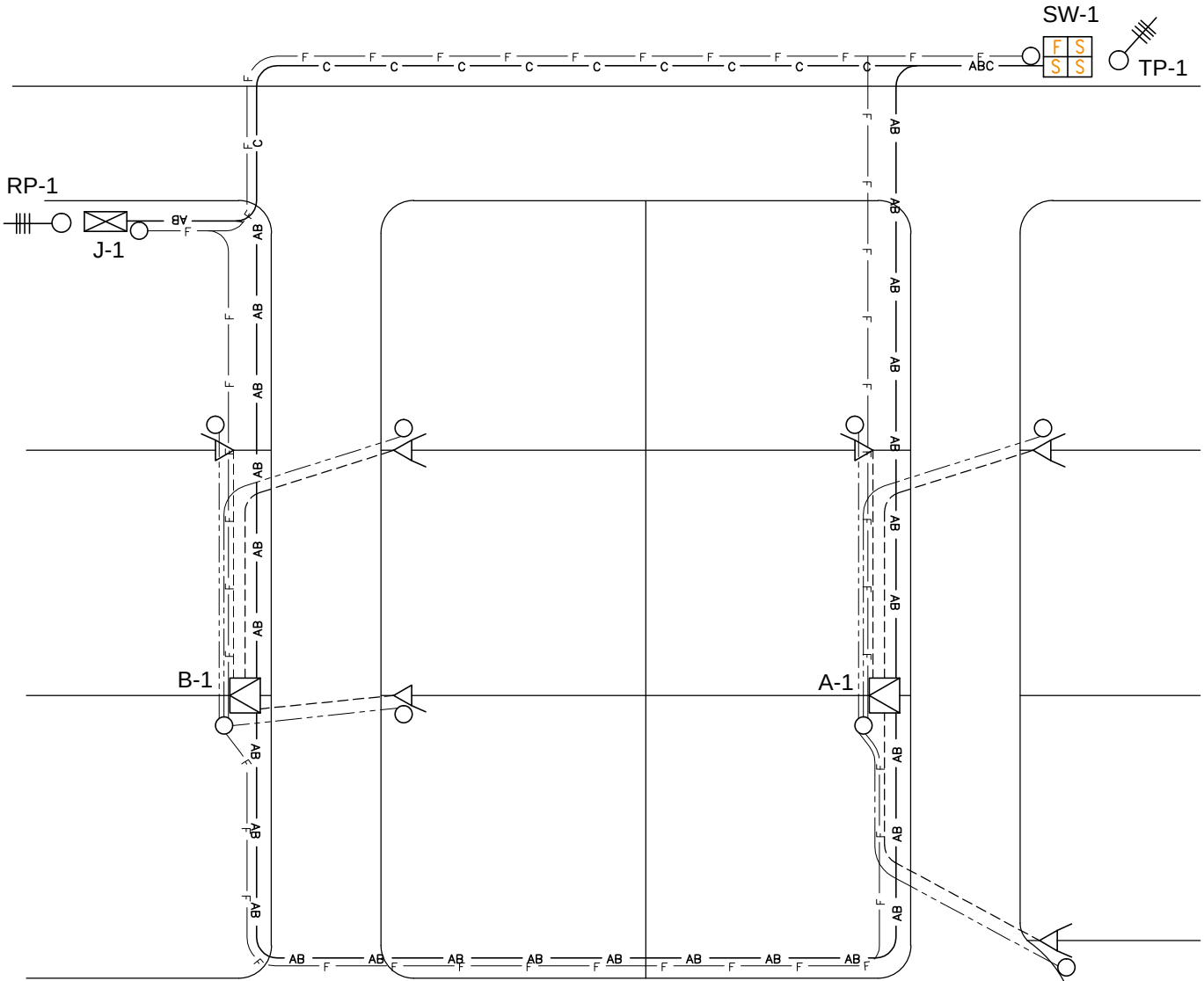


EXAMPLE OF TRANSFORMER TAG

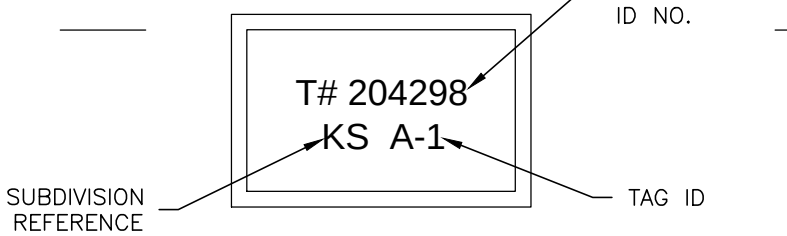


## NOTES/LEGEND

1. CONTRACTOR SHALL STENCIL PAINT T–NUMBERS AND TAGS ON THE OUTSIDE OF TRANFORMERS, SWITCHES AND PRIMARY JUNCTIONS. (NUMBERS TO BE PROVIDED BY THE ENERGY SERVICES DEPARTMENT.

2. SEE JOINT UTILITY TRENCH DETAIL D18 FOR INFORMATION ON CONDUIT PLACEMENT.

| | | | | | |
|---|---|---|---|---|---|
| F S / S S | PAD MOUNT SWITCH GEAR | | SECONDARY BOX | – – – – – – | SECONDARY POWER CONDUIT |
| | TRANSFORMER | —— F —— | FIBER CONDUIT | | |
| | 4-WAY VAULT | —— ABC —— | PRIMARY POWER CONDUIT | | |

| REVISIONS: | | | |
|---|---|---|---|
| REV | DATE | BY | DESCRIPTION |
| | | | |
| | | | |
| | | | |

APPROVED BY: –
DRAWN BY: –
DATE: –
FILE: –

TAGGING SYSTEM

CITY OF ST. GEORGE
ENERGY SERVICES DEPARTMENT
UNDERGROUND STANDARDS

DETAIL
D19