# MUNICIPAL POWER IMPACT FEE FACILITIES PLAN (IFFP) & IMPACT FEE ANALYSIS (IFA)

CITY OF ST. GEORGE, UTAH

FINAL ADOPTED

JULY 10, 2014

LEWIS YOUNG ROBERTSON & BURNINGHAM, INC.

GATEWAY PLAZA BUILDING - 41 N. RIO GRANDE, STE 101 - SALT LAKE CITY, UT 84101

(P) 801-596-0700 - (TF) 800-581-1100 - (F) 801-596-2800 - WWW.LEWISYOUNG.COM

**Certification for Impact Fee Facilities Plan and Impact Fee Analysis**

**IFFP Certification**

LYRB certifies that the attached impact fee facilities plan:

1. includes only the costs of public facilities that are:
    a. allowed under the Impact Fees Act; and
    b. actually incurred; or
    c. projected to be incurred or encumbered within six years after the day on which each impact fee is paid;
2. does not include:
    a. costs of operation and maintenance of public facilities;
    b. costs for qualifying public facilities that will raise the level of service for the facilities, through impact fees, above the level of service that is supported by existing residents;
    c. an expense for overhead, unless the expense is calculated pursuant to a methodology that is consistent with generally accepted cost accounting practices and the methodological standards set forth by the federal Office of Management and Budget for federal grant reimbursement; and,
3. complies in each and every relevant respect with the Impact Fees Act.

**IFA Certification**

LYRB certifies that the attached impact fee analysis:

1. includes only the costs of public facilities that are:
    a. allowed under the Impact Fees Act; and
    b. actually incurred; or
    c. projected to be incurred or encumbered within six years after the day on which each impact fee is paid;
2. does not include:
    a. costs of operation and maintenance of public facilities;
    b. costs for qualifying public facilities that will raise the level of service for the facilities, through impact fees, above the level of service that is supported by existing residents;
    c. an expense for overhead, unless the expense is calculated pursuant to a methodology that is consistent with generally accepted cost accounting practices and the methodological standards set forth by the federal Office of Management and Budget for federal grant reimbursement;
3. offsets costs with grants or other alternate sources of payment; and,
4. complies in each and every relevant respect with the Impact Fees Act.

**LYRB makes this certification with the following caveats**:

1. All of the recommendations for implementations of the IFFP made in the IFFP documents or in the IFA documents are followed by City Staff and elected officials.
2. If all or a portion of the IFFP or IFA are modified or amended, this certification is no longer valid.
3. All information provided to LYRB is assumed to be correct, complete, and accurate. This includes information provided by the City as well as outside sources.

LEWIS YOUNG ROBERTSON & BURNINGHAM, INC.


Lewis Young Robertson & Burningham, Inc. Salt Lake City, Utah 84101 Office 801.596.0700 Fax 801.596.2800

## TABLE OF CONTENTS

**SECTION 1: EXECUTIVE SUMMARY ..... 4**
PROPOSED POWER IMPACT FEE ..... 4

**SECTION 2: GENERAL IMPACT FEE METHODOLOGY ..... 7**

**SECTION 3: OVERVIEW OF SERVICE AREA, DEMAND, AND LOS ..... 9**
SERVICE AREA ..... 9
DEMAND UNITS ..... 9
LEVEL OF SERVICE STANDARDS ..... 10

**SECTION 4: EXISTING FACILTIES INVENTORY ..... 11**
VALUE OF EXISTING POWER INFRASTRUCTURE ..... 11
EXCESS CAPACITY ..... 11
MANNER OF FINANCING EXISTING INFRASTRUCTURE ..... 13

**SECTION 5: CAPITAL FACILITY ANALYSIS ..... 14**
POWER RESOURCE IMPROVEMENTS ..... 14
CITY TRANSMISSION & DISTRIBUTION IMPROVEMENTS ..... 14
MAIN TRANSMISSION SYSTEM IMPROVEMENTS ..... 15
SUMMARY OF FUTURE CAPITAL PROJECTS ..... 15
SYSTEM VS. PROJECT IMPROVEMENTS ..... 19
FUNDING OF FUTURE FACILITIES ..... 19
EQUITY OF IMPACT FEES ..... 19
NECESSITY OF IMPACT FEES ..... 20

**SECTION 6: POWER IMPACT FEE CALCULATION ..... 21**
PROPOSED POWER IMPACT FEES ..... 21
CONSIDERATION OF ALL REVENUE SOURCES ..... 22
EXPENDITURE OF IMPACT FEES ..... 23
PROPOSED CREDITS OWED TO DEVELOPMENT ..... 23
GROWTH-DRIVEN EXTRAORDINARY COSTS ..... 23
SUMMARY OF TIME PRICE DIFFERENTIAL ..... 23

**APPENDIX A: POWER SERVICE AREA ..... 24**

**APPENDIX B: TYPICAL LOAD PROFILES ..... 25**

**APPENDIX C: JOINT PLAN STUDY ..... 26**

# SECTION 1: EXECUTIVE SUMMARY

The purpose of the Municipal Power Impact Fee Facilities Plan ("IFFP"), with supporting Impact Fee Analysis ("IFA"), is to fulfill the requirements established in Utah Code Title 11 Chapter 36a, the "Impact Fees Act", and assist the City of St. George (the "City") in financing and constructing necessary capital improvements for future growth. This document will address the future infrastructure needed to serve the City through the next nine years, as well as the appropriate impact fees the City may charge to new growth to maintain the level of service ("LOS").

- **Impact Fee Service Area:** The Municipal Power Service Area ("Service Area") currently serves approximately **27,000 accounts** or nearly **59,000 residents**, which is approximately 74 percent of the City's total population. The remaining portion of the City is served by the Dixie Power Cooperative. The City's electric system also serves the majority of the commercial businesses.

- **Demand Analysis:** The proposed impact fees are based upon the costs of capital infrastructure that will be necessary to serve new development. A total of 104,472 additional kilowatts (kW) of demand will be generated based on the projected build out in undeveloped land within the current Service Area. A total **41,068 kW** are projected to occur within the IFFP planning horizon, (9-10 years; 2-3% per year growth). See **SECTION 3** for details regarding growth in kW and equivalent units (EUs).

- **Level of Service:** The power level of service, as defined by the St. George City Energy Services Department, is based on an average load per ERU of **6.69 kilowatts ("kWs").** The average load per ERU was calculated by taking the peak load of 169,000 kW ending 2010 (see **TABLE 3.1**) and dividing by the total number of ERUs (beginning 2011 at 25,261). New facilities are designed to maintain this level of service.

- **Excess Capacity:** The City does not have excess energy capacity during peak periods. Short term market purchases are required to supply energy during peak periods. There is however, approximately 67 percent of the Green Valley substation that has capacity available for growth, the actual cost of which is included in the impact fee calculation.[1]

- **Capital Facilities Analysis:** The costs of future projects related to growth and funded with impact fees are estimated at **$28.8 million**.[2]

- **Funding of Future Facilities:** At the request of the City, no financing costs are included in this analysis and thus assumes all future facilities will be funded on a cash basis.

## PROPOSED POWER IMPACT FEE

### PLAN BASED (FEE BASED ON DEFINED CAPITAL IMPROVEMENT PLAN)

Impact fees can be calculated using a specific set of costs specified for future development. The improvements are identified in the IFFP, Capital Facilities Plan ("CFP") or Capital Improvement Plan ("CIP") as growth related projects. The total project costs are divided by the total demand units the projects are designed to serve. Under this methodology, it is important to identify the existing level of service and determine any excess capacity in existing facilities that could serve new growth.

---

[1] The Green Valley transmission and substation were built to serve the west side load and provide backup to the Skyline and River substations. Due to economies of scale and transformer size, a 75 mW transformer was installed with a future bay and additional transformer pad to the west side. Growth is expected over the next 10 years to use up this capacity.

[2] All power generation projects have been removed due to the uncertainty of the type of projects needed to serve growth. Once these projects are more specifically defined, the impact fee will need to be revised to include the cost of these projects that is applicable to growth.

## POWER IMPACT FEE CALCULATION

Based on the growth-related projects, as well as the applicable buy-in fee, the cost per new kW is estimated at $858 as shown in **TABLE 1.1** below. The fee per kW is then applied to the general usage statistics for residential and commercial users, as shown in **TABLE 1.2** through **1.4.**

TABLE 1.1: ILLUSTRATION OF COST PER NEW KW

| POWER PROJECTS | TOTAL COSTS WITHIN IFFP HORIZON | % GROWTH RELATED & IMPACT FEE FUNDED | GROWTH RELATED & IMPACT FEE FUNDED COSTS | GROWTH RELATED KW | COST PER NEW KW |
|---|---|---|---|---|---|
| **CAPITAL PROJECTS** | | | | | |
| Generation Additions | $2,452,897 | 50% | $1,226,448 | 41,068 | $29.86 |
| Distribution and Transmission | $34,509,165 | 80% | $27,594,646 | 41,068 | $671.93 |
| Sub-Total Capital Projects Cost | $36,962,061 | | $28,821,094 | | $701.79 |
| **BUY-IN** | | | | | |
| Green Valley | $11,680,125 | 67% | $7,786,750 | 50,000 | $155.73 |
| Sub-Total Buy-In Cost | $11,680,125 | | $7,786,750 | | $155.73 |
| **OTHER** | | | | | |
| Professional Expense[3] | $9,675 | 100% | $9,675 | 25,043 | $0.39 |
| Sub-Total Other Cost | $9,675 | | $9,675 | | $0.39 |
| **Total[4]** | **$48,651,861** | | **$36,617,519** | | **$857.91** |

TABLE 1.2: ILLUSTRATION OF RESIDENTIAL IMPACT FEE

| SERVICE DESCRIPTION | EST. KW | COST PER KW | IMPACT FEE | 2006 FEE[5] | % CHANGE |
|---|---|---|---|---|---|
| 100 Amp - 240/120 V | 4.25 | $858 | $3,646 | $2,790 | 31% |
| 200 Amp - 240/120 V | 5.25 | $858 | $4,504 | $3,446 | 31% |
| 400 Amp - 240/120 V | 9.00 | $858 | $7,721 | $5,908 | 31% |

TABLE 1.3: ILLUSTRATION OF COMMERCIAL IMPACT FEE

| SERVICE DESCRIPTION | PANEL RATING | 100% PANEL KVA | AVG PANEL LOADING | AVG PEAK DEMAND @ PANEL (KVA) | EST. CUSTOMER CLASS DIVERSITY | EST. AVERAGE DIVERSIFIED KVA |
|---|---|---|---|---|---|---|
| **Single Phase Service** | | | | | | |
| 240/120 V | 200 | 48 | 30% | 14.40 | 55% | 7.92 |
| | 400 | 96 | 30% | 28.80 | 55% | 15.84 |
| **Three Phase Service** | | | | | | |
| 208Y/120 V | 200 | 72 | 40% | 28.82 | 55% | 15.85 |
| | 400 | 144 | 40% | 57.64 | 55% | 31.70 |
| | 800 | 288 | 40% | 115.29 | 55% | 63.41 |
| | 1,200 | 432 | 40% | 172.93 | 55% | 95.11 |
| | 2,000 | 721 | 40% | 288.21 | 55% | 158.52 |
| 480Y/277 V | 200 | 166 | 40% | 66.51 | 55% | 36.58 |
| | 400 | 333 | 40% | 133.02 | 55% | 73.16 |
| | 800 | 665 | 40% | 266.04 | 55% | 146.32 |
| | 1,200 | 998 | 40% | 399.06 | 55% | 219.49 |
| | 2,000 | 1,663 | 40% | 665.11 | 55% | 365.81 |

[3] This is the actual cost to update the IFFP and IFA. The City can use this portion of the impact fee to reimburse itself for the expense of updating the IFFP and IFA. The cost is divided over the new kWs generated in the next six years.
[4] As of June 30, 2013 the electric utility impact fee fund balance was negative and thus not shown in the calculation of the impact fee above.
[5] When the existing fee was adopted in 2006, it was adopted at 75 percent of what was recommended.

TABLE 1.4: ILLUSTRATION OF COMMERCIAL IMPACT FEE (CONT.)

| SERVICE DESCRIPTION | EST. AVERAGE DIVERSIFIED KVA | ESTIMATED DIVERSIFIED KW | COST PER KW | IMPACT FEE | 2006 FEE | % CHANGE |
|---|---|---|---|---|---|---|
| **Single Phase Service** | | | | | | |
| 240/120 V | 7.92 | 7.13 | $858 | $6,115 | $4,679 | 31% |
| | 15.84 | 14.26 | $858 | $12,230 | $9,358 | 31% |
| **Three Phase Service** | | | | | | |
| 208Y/120 V | 15.85 | 14.27 | $858 | $12,239 | $9,365 | 31% |
| | 31.70 | 28.53 | $858 | $24,479 | $18,731 | 31% |
| | 63.41 | 57.07 | $858 | $48,958 | $37,462 | 31% |
| | 95.11 | 85.60 | $858 | $73,437 | $56,192 | 31% |
| | 158.52 | 142.67 | $858 | $122,395 | $93,654 | 31% |
| 480Y/277 V | 36.58 | 32.92 | $858 | $28,245 | $21,612 | 31% |
| | 73.16 | 65.85 | $858 | $56,490 | $43,225 | 31% |
| | 146.32 | 131.69 | $858 | $112,980 | $86,450 | 31% |
| | 219.49 | 197.54 | $858 | $169,469 | $129,675 | 31% |
| | 365.81 | 329.23 | $858 | $282,449 | $216,125 | 31% |

## NON-STANDARD IMPACT FEES

The proposed fees are based upon growth in kWs. The City reserves the right under the Impact Fees Act to assess an adjusted fee that more closely matches the true impact that the land use will have upon public facilities.[6] This adjustment could result in a higher or lower impact fee if the City determines that a particular user may create a different impact than what is standard for its land use.

**Estimated Usage / 6.69 kWh * $858**

[6] UC 11-36a-402(1)(c)

# SECTION 2: GENERAL IMPACT FEE METHODOLOGY

The purpose of this study is to fulfill the requirements of the Impact Fees Act regarding the establishment of an IFFP and IFA. The IFFP is designed to identify the demands placed upon the City's existing facilities by future development and evaluate how these demands will be met by the City. The IFFP is also intended to outline the improvements which are intended to be funded by impact fees. The IFA is designed to proportionately allocate the cost of the new facilities and any excess capacity to new development, while ensuring that all methods of financing are considered. Each component must consider the historic level of service provided to existing development and ensure that impact fees are not used to raise that level of service. The following elements are important considerations when completing an IFFP and IFA.

FIGURE 2.1: IMPACT FEE METHODOLOGY

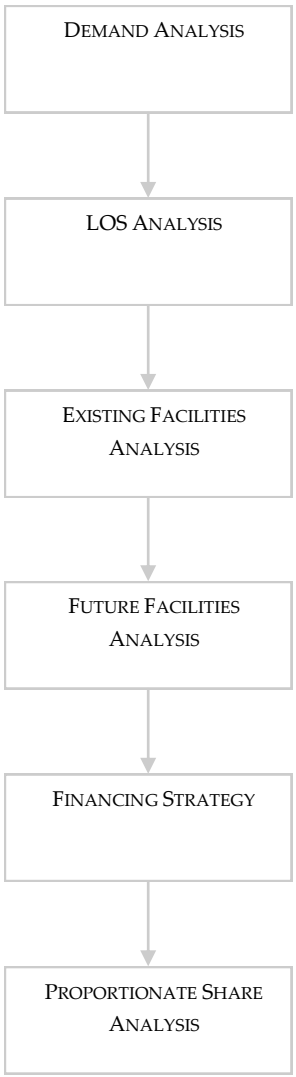


## DEMAND ANALYSIS

The demand analysis serves as the foundation for the IFFP. This element focuses on a specific demand unit related to each public service – the existing demand on public facilities and the future demand as a result of new development that will impact public facilities.

## LEVEL OF SERVICE ANALYSIS

The demand placed upon existing public facilities by existing development is known as the existing "Level of Service" ("LOS"). Through the inventory of existing facilities, combined with the growth assumptions, this analysis identifies the level of service which is provided to a community's existing residents and ensures that future facilities maintain these standards. Any excess capacity identified within existing facilities can be apportioned to new development. Any demand generated from new development that overburdens the existing system beyond the existing capacity justifies the construction of new facilities.

## EXISTING FACILITY INVENTORY

In order to quantify the demands placed upon existing public facilities by new development activity, the IFFP provides an inventory of the City's existing system improvements. To the extent possible, the inventory valuation should consist of the following information:

- Original construction cost of each facility;
- Estimated date of completion of each future facility;
- Estimated useful life of each facility; and,
- Remaining useful life of each existing facility.

The inventory of existing facilities is important to properly determine the excess capacity of existing facilities and the utilization of excess capacity by new development.

## FUTURE CAPITAL FACILITIES ANALYSIS

The demand analysis, existing facility inventory and LOS analysis allow for the development of a list of capital projects necessary to serve new growth and to maintain the existing system. This list includes any excess capacity of existing facilities as well as future system improvements necessary to maintain the level of service. Any demand generated from new development that overburdens the existing system beyond the existing capacity justifies the construction of new facilities.

### FINANCING STRATEGY – CONSIDERATION OF ALL REVENUE SOURCES

This analysis must also include a consideration of all revenue sources, including service rates, impact fees, future debt costs, alternative funding sources and the dedication of system improvements, which may be used to finance system improvements.[7] In conjunction with this revenue analysis, there must be a determination that impact fees are necessary to achieve an equitable allocation of the costs of the new facilities between the new and existing users.[8]

### PROPORTIONATE SHARE ANALYSIS

The written impact fee analysis is required under the Impact Fees Act and must identify the impacts placed on the facilities by development activity and how these impacts are reasonably related to the new development. The written impact fee analysis must include a proportionate share analysis, clearly detailing each cost component and the methodology used to calculate each impact fee. A local political subdivision or private entity may only impose impact fees on development activities when its plan for financing system improvements establishes that impact fees are necessary to achieve an equitable allocation to the costs borne in the past and to be borne in the future (UCA 11-36a-302).

[7] 11-36a-302(2)
[8] 11-36a-302(3)

# SECTION 3: OVERVIEW OF SERVICE AREA, DEMAND, AND LOS

## SERVICE AREA

Utah Code requires the impact fee enactment to establish one or more service areas within which impact fees will be imposed.[9] The City's electrical system currently serves approximately 27,000 accounts or nearly 59,000 residents which is approximately 74 percent of the City's total population. The remaining portion of the City is served by the Dixie Power Cooperative. The City's electric system also serves the majority of the commercial businesses. See **APPENDIX A** for a map of the Service Area.

## DEMAND UNITS

The City of St. George Municipal Power system is in need of expansion to perpetuate the level of service that the City has historically maintained as new growth and development activity continue to occur within the area served by the City of St. George Municipal Energy Services Department. The City of St. George Energy Service Department has outlined the recommended capital projects that will maintain the established level of service through 2022.

All information regarding the existing power level of service, projected system load growth, future power capital projects, and proposed power impact fee relates to the City of St. George Municipal Power and the area served by the City of St. George Municipal Energy Services Department. The City of St. George Municipal Power Service Area ("Power Impact Fee Service Area") is defined in **APPENDIX A** of this study plan.

### DEMAND UNITS

The proposed impact fees are based upon the costs of capital infrastructure that will serve future growth. **TABLE 3.1** illustrates the new demand generated from all the undeveloped areas within the City. This is a build out demand analysis based on current zoning plans within the City limits and service territory.

TABLE 3.1: ILLUSTRATION OF NEW DEMAND WITH SERVICE AREA

| UNDEVELOPED AREAS – NON-HILLSIDE: LAND USE CODE | TOTAL EST. UNITS | EST. % IN SERVICE AREA | EST. UNITS IN SERVICE AREA | EST. KW PER UNIT | EST. TOTAL KW LOAD |
|---|---|---|---|---|---|
| High Density Residential (HDR) | 1,083 | 20% | 217 | 4.0 | 868 |
| Low Density Residential (LDR) | 13,049 | 75% | 9,787 | 5.5 | 53,829 |
| Medium Density Residential (MDR) | 3,406 | 20% | 681 | 5.0 | 3,405 |
| Multi-Residential (MR) | 12,839 | 20% | 2,568 | 4.5 | 11,556 |
| Rural Residential (RR) | 1,547 | 0% | 0 | 5.0 | 0 |
| Very Low Density Residential (VLDR) | 152 | 50% | 76 | 5.5 | 418 |
| Subtotal: | 32,076 | | 13,329 | | 70,076 |
| **UNDEVELOPED AREAS: HILLSIDE** | | | | | |
| 25 % Slope | 1,240 | 50% | 620 | 4.5 | 2,790 |
| 40 % Slope | 0 | 0% | 0 | | 0 |
| Subtotal: | | | 620 | | 2,790 |
| Developed Areas - Vacant Lots | 2,917 | | 1,666 | 4.5 | 7,497 |
| | | | | Est. Future Residential Load Additions: | 80,363 |
| | | | | Est. Commercial Load Additions: | 24,109 |
| | | | | **Total Estimated New Demand:** | **104,472** |

To accurately determine the portion of the costs of future capital infrastructure that should be included in the impact fees, this analysis projects the future growth in demand units (kW/ERU). The demand unit used in the calculation of the power impact fees is the estimated summer peak load, or power capacity, measured in kilowatts (kW). The summer peak values are used because the City's power system is required by the Federal

[9] UC 11-36a-402(a)

Energy Regulatory Commission (FERC) and the North American Electric Reliability Corporation (NERC) to meet national reliability standards, which dictate the required design load levels. These demand values are consistent with the values used in the area Joint Systems Transmission Planning Study, which has been included in this document as **APPENDIX C**. The St. George City Energy Services Department has projected the existing and future kWs within the Power Service Area through 2025, but this IFFP focuses primarily on the next nine years. **TABLE 3.2** summarizes the projected annual increase in kWs within the Power Service Area.

TABLE 3.2: PROJECTED GROWTH IN ERUS AND KILOWATTS IN SERVICE AREA

| YEAR | LOAD | GROWTH RATE | NEW KW | NEW ERUS |
|---|---|---|---|---|
| 2012 | 176,000 | | | |
| 2013 | 180,000 | 2.3% | 4,000 | 598 |
| 2014 | 183,000 | 1.7% | 3,000 | 448 |
| 2015 | 187,000 | 2.2% | 4,000 | 598 |
| 2016 | 191,000 | 2.1% | 4,000 | 598 |
| 2017 | 195,011 | 2.1% | 4,011 | 600 |
| 2018 | 199,964 | 2.5% | 4,953 | 740 |
| 2019 | 205,043 | 2.5% | 5,079 | 759 |
| 2020 | 210,251 | 2.5% | 5,208 | 778 |
| 2021 | 215,592 | 2.5% | 5,340 | 798 |
| 2022 | 221,068 | 2.5% | 5,476 | 819 |
| 2023 | 226,683 | 2.5% | 5,615 | 839 |
| 2024 | 232,441 | 2.5% | 5,758 | 861 |
| 2025 | 238,345 | 2.5% | 5,904 | 883 |
| **Total kW (2013-2022)** | | | **41,068** | |

It is anticipated that the growth projected over the next nine years will impact the City's existing services. Power facilities will need to be expanded in order to maintain the existing level of service. The IFFP, in conjunction with the impact fee analysis, are designed to accurately assess the true impact of a particular user upon the City's infrastructure.

## LEVEL OF SERVICE STANDARDS

Impact fees cannot be used to finance an increase in the level of service to current or future users of capital improvements. Therefore, it is important to identify the power level of service within the Power Service Area to ensure that the new capacities of projects financed through impact fees do not exceed the established standard. The power level of service, as defined by the St. George City Energy Services Department, is shown below.

TABLE 3.3: LEVEL OF SERVICE

| | LOS |
|---|---|
| Existing Peak Load (kw) | 169,000 |
| Existing ERUs (2011) | 25,261 |
| **kW/ERU** | **6.69** |

The level of service or average load per ERU (6.69 kW) was calculated by taking the peak load in 2010 of 169,000 kW and dividing by the total number of ERUs beginning in 2011 (25,261).

# SECTION 4: EXISTING FACILTIES INVENTORY

This section is intended to summarize the existing public facilities related to power services. Generally, existing assets are separated into two areas: (1) Power Resources; and, (2) City Transmission and Distribution System Improvements.

## VALUE OF EXISTING POWER INFRASTRUCTURE

Based upon the City's 2011 electric utility depreciation schedule, the existing power system is valued at approximately $144 million, based on original cost, as shown in **TABLE 4.1**.

TABLE 4.1: VALUE OF EXISTING POWER SYSTEM

| ITEM | ORIGINAL COST |
|---|---|
| Building | $82,725,934 |
| Improvements | $7,320,600 |
| Land | $350,166 |
| Other | $54,120,200 |
| **Total** | **$144,516,900** |

"Other" includes some distribution related improvements.

## EXCESS CAPACITY

### POWER RESOURCES

Careful management and planning of the City's power energy resources is critical to maintain a reliable electrical system and keep costs to a minimum. The cost of the power that the City must either purchase or generate is the largest component of the Energy Services budget as well as the cost of power to the City's customers. The figure below, as well as **TABLE 4.2**, illustrates the existing resources available to the City.

FIGURE 4.1: ILLUSTRATION OF EXISTING POWER RESOURCES

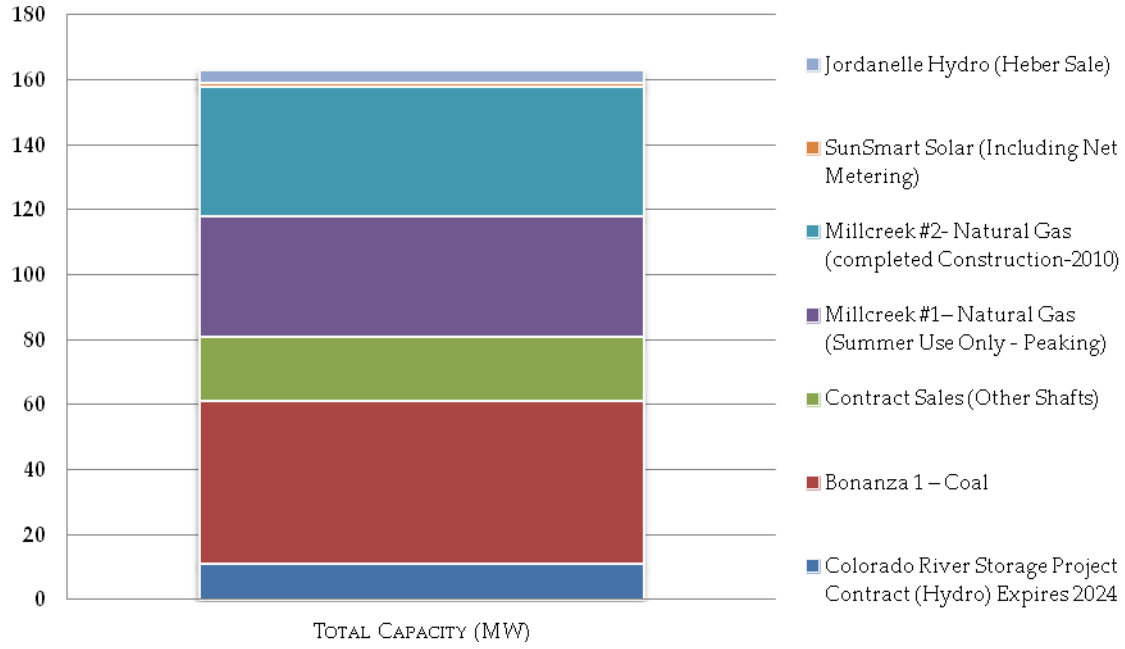

TABLE 4.2: EXISTING POWER RESOURCES

| CURRENT SOURCES | CAPACITY MW (PEAK) |
|---|---|
| **Colorado River Storage Project Contract (Hydro) Expires 2024** | |
| Western Replacement Power | 19 |
| Western System Power Pool | 10 |
| Actual Contracted Amount before Market Purchase | 11 |
| **Deseret Generation and Transmission** | |
| Bonanza 1 – Coal | 50 |
| Contract Sales (Other Shafts) | 20 |
| **City Owned Generation** | |
| Red Rock – Diesel **(Emergency Only)** | 14 |
| Bloomington – Diesel **(Emergency Only)** | 11 |
| Millcreek #1– Natural Gas **(Summer Use Only - Peaking)** | 37 |
| Millcreek #2- Natural Gas **(Completed Construction-2010)** | 40 |
| **Renewable Resources** | |
| SunSmart Solar (Including Net Metering) | 1 |
| **Long Term Purchase Contacts** | |
| Jordanelle Hydro (Heber sale) | 4 |
| **Total Resources Available to the City** | **163** |
| **Other Available Sources** | |
| Short Term Market Purchases/Sales (1-3 year contracts) | |
| Utah Associated Municipal Power (UAMPS) | |
| Natural Gas (BP Long Term Gas Hedge) (35%-50% of Requirements into 2021) | |

The shape of an electrical system's load indicates the type of resources that are needed to supply the load. The City's system is summer peaking, which is caused by the heavy air conditioning load during hot summer days. A typical load profile for the City's electrical system for the month of July is shown in Figure C.1 of **APPENDIX B**. Figure C.2 is a typical load profile for the month of October. Also included is Figure C.3 which shows the number of hours that the City's electrical load is at or above a given load level. These graphs show that the peak load level during the off peak months is significantly lower than the summer. This indicates that there is excess capacity in the system during the winter months but no excess capacity in the summer months. In fact, the City often has to go to the market to purchase power when demand peaks at a level higher than City sources are able to provide.

In 2005 and 2008 the City added an additional 77 MW of capacity with Millcreek #1 and Millcreek #2. The City has historically followed a policy to purchase power from the market until reaching -25 MW, at which point an additional generation resource is constructed.

It is anticipated that an additional peaking resource would be required in the 2017-2018 timeframe. The peaking resource could be in the form of a power contract or additional generation facility. However, since the type of source has not yet been identified, the City has chosen not to include a cost for additional generation resources in the impact fee study. Future generation will be evaluated on a case by case basis. The City may elect to enter into long term peaking agreements with outside entities rather than constructing new generation facilities inside the City. Once the City has defined the type of generation resource needed to meet growing demand, the impact fees will be revised to include these costs if necessary.

Thus, the only generation cost shown in the impact fee is approximately $200,000 of improvements included annually in order to keep the City's existing generation facilities in top operating condition and maintain the level of service due to added growth.

### CITY TRANSMISSION & DISTRIBUTION FACILITIES

The City maintains a network of transmission and distribution infrastructure. While segments of this infrastructure may have excess capacity, it is difficult to quantify the excess capacity within individual transmission and distribution lines or segments. The system operates as a whole by having one area back up another in the event of an outage. The Green Valley Transmission Line and Substation is one exception and has been included as a buy-in component in the impact fee. The cost of the Green Valley infrastructure was approximately $11,680,125 with a total capacity of 75 MW. The City estimates only 25 MW of capacity have been used to date, leaving an excess capacity of 50 MW or 67 percent of the total capacity. In constructing substations and transmission lines, it is not practical to build just to meet current growth/load due to economies of scale. Thus, the Green Valley system was built at an optimal level related to cost. The substation only has one transformer with room to expand with the addition of a second transformer. The Green Valley area is an identified growth area and will be fed out of the new Green Valley system.

## MANNER OF FINANCING EXISTING INFRASTRUCTURE

St. George Energy Services has funded its existing capital infrastructure through a combination of different revenue sources, including user fee revenues, service fees, impact fees, and bond issues. Therefore, the City's existing "level of service" standards have been funded by the City's existing residents. The City anticipates that it may receive some donations from new development to fund a specific improvement (project improvement), thus the cost of this improvement has been removed from the impact fees. Also, the City does not foresee receiving revenues from other entities (i.e. grants, federal or state funds, other contributions, etc.) to fund new facilities.

# SECTION 5: CAPITAL FACILITY ANALYSIS

The projected resource needs for the next several years are indicated in this section. The estimated costs of future capital projects are based on historical experience with the system and projected growth patterns for the system. The proposed capital projects are separated into three areas: (1) Power Resource Improvements, (2) City Transmission and Distribution System Improvements, and (3) Main Jointly Owned Transmission System Improvements.

## POWER RESOURCE IMPROVEMENTS

The only generation costs included in the impact fee is approximately $200,000 of improvements annually to allow the City's existing generation facilities to accommodate any impact on the generation related to projected growth. While it is difficult to specifically identify the exact amount related to growth, the City is planning on sharing these costs through the user rate, thus 50% of the costs are allocated to growth in the impact fee and 50% are allocated to existing residents and included in the user rate.

It is anticipated that an additional peaking resource would be required in the 2017-2018 timeframe. The peaking resource could be in the form of a power contract or additional generation facility. However, since the type of source has not yet been identified, the City has chosen not to include a cost for additional generation resources in the impact fee study. Once the City has defined the type of generation resource needed to meet growing demand, the impact fees will be revised to include these costs if necessary.

## CITY TRANSMISSION & DISTRIBUTION IMPROVEMENTS

Due to the increasing system loads, improvements to the system will be required in order to maintain the level of service and deliver the increased load demand to the City's electrical customers. Improvements to various components of the system will be required to meet all of the FERC/NERC reliability standards. The needed capital improvement projects are described below:

- Distribution capacitors help provide voltage support to both the distribution and transmission systems. Capacitors also improve overall system efficiency by reducing losses from the conductors and transformers on the system caused by additional load. The budget total is $411,000 for the installation of capacitors on the distribution system.
- Due to growth, new distribution substations and improvements to the existing distribution substations will be required to maintain reliable electric service to the City's customers. The cost will be $6,106,000.
- Improvements to subtransmission lines are ongoing as load grows so that single line failure does not cut off service to a large number of customers for more than a short time. Budgeted cost is $1,389,000.
- For new customer meters on the system, $1,001,000 has been budgeted. However, only 95% of these meters are growth related. In addition, connection fees cover approximately 70% of the meter cost, thus only 30% of the costs related to growth are included in the calculation of the impact fee.
- The City is in the process of adding equipment to increase the number of meters that can be automatically read by the City's automatic meter reading system. $1,500,000 has been allocated for the automatic meter reading system to account for future new meters.
- In order to increase capacity and to improve system efficiency, $1,391,000 has been included in the budget for reconductor portions of existing distribution lines rather than building new lines.
- Yard additions will be necessary to house the equipment in the future. Budgeted costs are $572,000. However, these costs are not attributed to growth, thus they are not included in the impact fee.
- Several improvements to the City's internal 69 kV transmission system will be needed to accommodate growth. These improvements include work such as 69 kV switch installations and line/pole relocations. The needed improvements are budgeted to cost $6,350,000.
- The SCADA system, which monitors and controls the various system components, requires ongoing improvements in order to keep the SCADA operating as required and to accommodate growth. The various SCADA upgrades are estimated to cost $631,000 for the next nine budgeted years.
- Budgeted cost for underground distribution projects and additions for growth is $2,785,000.

- A budget amount of $1,531,000 has been allocated for miscellaneous smaller projects and improvements on the City's electrical system. However, these costs are not attributed to growth, thus they are not included in the impact fee.
- An amount of $351,000 has been budgeted to connect the City's substations to the new fiber loop system to accommodate growth of data being transferred.
- Equipment improvements are needed for the substations to keep the flow of electricity to customers. Over the next nine years the cost will be $5,781,000. However, only $2,711,317 of the total cost will be related to growth and is included in the impact fee analysis.
- The City anticipates the need for the construction of a 69kV transmission line to serve the area from approximately mile marker 6 on State Route 18 north to the existing City limit at Winchester Hills to accommodate growth in the area. Cost in the year 2022 is estimated to be $9,540,000. At this time, however, the City has not determined the final cost and the manner in which this project will be funded and therefore has not included this cost in the impact fee calculation.
- Construct Dixie 138 kV Tie – West Side transmission line. $2,470,000 is budgeted for 2019 to cover these costs. This line will provide backup to the entire system.

## MAIN TRANSMISSION SYSTEM IMPROVEMENTS

The main transmission system which supplies power to Washington County (the "County") is owned and operated by several utilities and organizations. Over the past several years the utilities in the County have spent considerable time and effort to develop system plans to serve the increasing loads supplied by the various County utilities (Joint Plan System). The results of these cooperative efforts will be a more reliable electrical system, which also minimizes overall costs of the system by reducing the need for duplicate facilities. This cooperative effort has been referred to as the "one system plan-Joint System Plan", meaning that the planning and installation of main transmission infrastructure for the County will be developed similar to the approach if a single utility served all of the loads in the County. The City receives its power supply from two transmission systems, UAMPS and PacifiCorp. The most recent Joint Plan Study has been attached as **APPENDIX C** and needed improvements are outlined in this plan.

### SOUTHWEST UTAH JOINT TRANSMISSION PROJECTS

- Expand the area with additional looped 138 kV transmission throughout the study period
- Establish a new 138 kV delivery point and 138/69 kV substation in west Hurricane around 2014 with future 345 kV capability
- Expand St. George substation to 345 kV operation and install a 345/138 kV transformer by 2015
- Energize a 4th circuit between Red Butte and St. George at 345 kV by 2015
- Re-conductor St. George-fields 138 kV line with high temperature conductor by 2017
- Energize 2nd 345 kV circuit between Red Butte and St. George and add second 345/138 kV transformer at St. George by 2021
- Re-conductor St. George-Skyline #1 and #2 lines with high temperature conductor by 2022
- Construct new St. George-Hurricane 345 kV Line (initially operated 138kV) by 2023
- Construct Three Peaks-Hurricane 345 kV line to coincide with PacifiCorp Transmission requirements, energize St. George-Hurricane line at 345 kV, and install 345/138 kV transformation at proposed Hurricane West substation

Most of these joint transmission improvements are put into the rate base because they become an operating expense due to the City not having direct ownership or debt obligations. Thus these improvements are not included in the capital requirements for the City.

## SUMMARY OF FUTURE CAPITAL PROJECTS

Based upon the projected increase in kilowatts and demand on the system, the City has identified the future power capital projects that must be constructed over the next nine years to serve future development. The costs of these projects are detailed in **TABLE 5.1** and summarized in **TABLE 5.2**. The percentage of the total costs that is attributable to growth is based upon information provided by the City's Energy Services Department. All of the

projects listed in the table below have a life expectancy of more than 10 years. In addition, projects listed as "additions" or "improvements" only include the cost of added capacity to serve new growth and does not include the cost to replace the existing improvement.

TABLE 5.1: FUTURE POWER CAPITAL PROJECT COSTS

| POWER PROJECTS | YEAR | 2011 COST | CONSTRUCTION YEAR COSTS | % TO GROWTH | INFLATED COST TO GROWTH | % IMPACT FEE FUNDED | SUBTOTALS |
|---|---|---|---|---|---|---|---|
| RESOURCES | | | | | | | |
| Generation Additions | 2013 | $200,000 | $204,020 | 50% | $102,010 | 100% | $102,010 |
| Generation Additions | 2014 | $206,000 | $212,242 | 50% | $106,121 | 100% | $106,121 |
| Generation Additions | 2015 | $212,180 | $220,795 | 50% | $110,398 | 100% | $110,398 |
| Generation Additions | 2016 | $218,545 | $229,693 | 50% | $114,846 | 100% | $114,846 |
| Generation Additions | 2017 | $225,102 | $238,950 | 50% | $119,475 | 100% | $119,475 |
| Generation Additions | 2018 | $231,855 | $248,580 | 50% | $124,290 | 100% | $124,290 |
| Generation Additions | 2019 | $238,810 | $258,597 | 50% | $129,299 | 100% | $129,299 |
| Generation Additions | 2020 | $245,975 | $269,019 | 50% | $134,510 | 100% | $134,510 |
| Generation Additions | 2021 | $253,354 | $279,860 | 50% | $139,930 | 100% | $139,930 |
| Generation Additions | 2022 | $260,955 | $291,139 | 50% | $145,570 | 100% | $145,570 |
| **Total Other Resources** | | **$2,292,776** | **$2,452,897** | | **$1,226,448** | | **$1,226,448** |
| DISTRIBUTION AND TRANSMISSION | | | | | | | |
| Distribution Capacitors | 2013 | $74,000 | $75,487 | 100% | $75,487 | 100% | $75,487 |
| Distribution Capacitors | 2015 | $78,000 | $81,167 | 100% | $81,167 | 100% | $81,167 |
| Distribution Capacitors | 2017 | $83,000 | $88,106 | 100% | $88,106 | 100% | $88,106 |
| Distribution Capacitors | 2019 | $88,000 | $95,291 | 100% | $95,291 | 100% | $95,291 |
| Distribution Capacitors | 2021 | $88,000 | $97,207 | 100% | $97,207 | 100% | $97,207 |
| Distribution Substations - New & Improvements | 2014 | $1,353,000 | $1,393,997 | 100% | $1,393,997 | 100% | $1,393,997 |
| Distribution Substations - New & Improvements | 2016 | $1,523,000 | $1,600,688 | 100% | $1,600,688 | 100% | $1,600,688 |
| Distribution Substations - New & Improvements | 2018 | $1,615,000 | $1,731,499 | 100% | $1,731,499 | 100% | $1,731,499 |
| Distribution Substations - New & Improvements | 2021 | $1,615,000 | $1,783,965 | 100% | $1,783,965 | 100% | $1,783,965 |
| Subtransmission Line Improvements | 2013 | $246,000 | $250,945 | 100% | $250,945 | 100% | $250,945 |
| Subtransmission Line Improvements | 2014 | $127,000 | $130,848 | 100% | $130,848 | 100% | $130,848 |
| Subtransmission Line Improvements | 2017 | $130,000 | $137,998 | 100% | $137,998 | 100% | $137,998 |
| Subtransmission Line Improvements | 2018 | $178,000 | $190,840 | 100% | $190,840 | 100% | $190,840 |
| Subtransmission Line Improvements | 2020 | $189,000 | $206,707 | 100% | $206,707 | 100% | $206,707 |
| Subtransmission Line Improvements | 2021 | $330,000 | $364,525 | 100% | $364,525 | 100% | $364,525 |
| Subtransmission Line Improvements | 2022 | $189,000 | $210,861 | 100% | $210,861 | 100% | $210,861 |
| Meters | 2013 | $50,000 | $51,005 | 95% | $48,455 | 30% | $14,536 |
| Meters | 2014 | $95,000 | $97,879 | 95% | $92,985 | 30% | $27,895 |
| Meters | 2015 | $98,000 | $101,979 | 95% | $96,880 | 30% | $29,064 |
| Meters | 2016 | $101,000 | $106,152 | 95% | $100,844 | 30% | $30,253 |
| Meters | 2017 | $104,000 | $110,398 | 95% | $104,878 | 30% | $31,463 |
| Meters | 2018 | $107,000 | $114,718 | 95% | $108,983 | 30% | $32,695 |
| Meters | 2019 | $110,000 | $119,114 | 95% | $113,159 | 30% | $33,948 |
| Meters | 2020 | $113,000 | $123,586 | 95% | $117,407 | 30% | $35,222 |

| POWER PROJECTS | YEAR | 2011 COST | CONSTRUCTION YEAR COSTS | % TO GROWTH | INFLATED COST TO GROWTH | % IMPACT FEE FUNDED | SUBTOTALS |
|---|---|---|---|---|---|---|---|
| Meters | 2021 | $110,000 | $121,508 | 95% | $115,433 | 30% | $34,630 |
| Meters | 2022 | $113,000 | $126,071 | 95% | $119,767 | 30% | $35,930 |
| AMR Remote Metering | 2014 | $500,000 | $515,151 | 80% | $412,120 | 100% | $412,120 |
| AMR Remote Metering | 2015 | $500,000 | $520,302 | 80% | $416,242 | 100% | $416,242 |
| AMR Remote Metering | 2016 | $500,000 | $525,505 | 80% | $420,404 | 100% | $420,404 |
| Reconductor Distribution Lines | 2013 | $123,000 | $125,472 | 100% | $125,472 | 100% | $125,472 |
| Reconductor Distribution Lines | 2014 | $127,000 | $130,848 | 100% | $130,848 | 100% | $130,848 |
| Reconductor Distribution Lines | 2015 | $130,000 | $135,279 | 100% | $135,279 | 100% | $135,279 |
| Reconductor Distribution Lines | 2016 | $134,000 | $140,835 | 100% | $140,835 | 100% | $140,835 |
| Reconductor Distribution Lines | 2017 | $138,000 | $146,490 | 100% | $146,490 | 100% | $146,490 |
| Reconductor Distribution Lines | 2018 | $143,000 | $153,315 | 100% | $153,315 | 100% | $153,315 |
| Reconductor Distribution Lines | 2019 | $147,000 | $159,180 | 100% | $159,180 | 100% | $159,180 |
| Reconductor Distribution Lines | 2020 | $151,000 | $165,146 | 100% | $165,146 | 100% | $165,146 |
| Reconductor Distribution Lines | 2021 | $147,000 | $162,379 | 100% | $162,379 | 100% | $162,379 |
| Reconductor Distribution Lines | 2022 | $151,000 | $168,466 | 100% | $168,466 | 100% | $168,466 |
| Yard Additions | 2014 | $127,000 | $130,848 | 0% | $0 | 0% | $0 |
| Yard Additions | 2018 | $143,000 | $153,315 | 0% | $0 | 0% | $0 |
| Yard Additions | 2020 | $151,000 | $165,146 | 0% | $0 | 0% | $0 |
| Yard Additions | 2022 | $151,000 | $168,466 | 0% | $0 | 0% | $0 |
| SCADA Improvements | 2015 | $150,000 | $156,091 | 100% | $156,091 | 100% | $156,091 |
| SCADA Improvements | 2018 | $160,000 | $171,542 | 100% | $171,542 | 100% | $171,542 |
| SCADA Improvements | 2021 | $170,000 | $187,786 | 100% | $187,786 | 100% | $187,786 |
| SCADA Improvements | 2022 | $151,000 | $168,466 | 100% | $168,466 | 100% | $168,466 |
| Underground Projects & Additions | 2013 | $246,000 | $250,945 | 100% | $250,945 | 100% | $250,945 |
| Underground Projects & Additions | 2014 | $253,000 | $260,666 | 100% | $260,666 | 100% | $260,666 |
| Underground Projects & Additions | 2015 | $261,000 | $271,598 | 100% | $271,598 | 100% | $271,598 |
| Underground Projects & Additions | 2016 | $269,000 | $282,722 | 100% | $282,722 | 100% | $282,722 |
| Underground Projects & Additions | 2017 | $277,000 | $294,041 | 100% | $294,041 | 100% | $294,041 |
| Underground Projects & Additions | 2018 | $285,000 | $305,559 | 100% | $305,559 | 100% | $305,559 |
| Underground Projects & Additions | 2019 | $294,000 | $318,360 | 100% | $318,360 | 100% | $318,360 |
| Underground Projects & Additions | 2020 | $303,000 | $331,387 | 100% | $331,387 | 100% | $331,387 |
| Underground Projects & Additions | 2021 | $294,000 | $324,759 | 100% | $324,759 | 100% | $324,759 |
| Underground Projects & Additions | 2022 | $303,000 | $338,048 | 100% | $338,048 | 100% | $338,048 |
| Miscellaneous Projects | 2013 | $135,000 | $137,714 | 0% | $0 | 0% | $0 |
| Miscellaneous Projects | 2014 | $139,000 | $143,212 | 0% | $0 | 0% | $0 |
| Miscellaneous Projects | 2015 | $144,000 | $149,847 | 0% | $0 | 0% | $0 |
| Miscellaneous Projects | 2016 | $148,000 | $155,549 | 0% | $0 | 0% | $0 |
| Miscellaneous Projects | 2017 | $152,000 | $161,351 | 0% | $0 | 0% | $0 |
| Miscellaneous Projects | 2018 | $157,000 | $168,325 | 0% | $0 | 0% | $0 |
| Miscellaneous Projects | 2019 | $162,000 | $175,423 | 0% | $0 | 0% | $0 |
| Miscellaneous Projects | 2020 | $166,000 | $181,552 | 0% | $0 | 0% | $0 |
| Miscellaneous Projects | 2021 | $162,000 | $178,949 | 0% | $0 | 0% | $0 |
| Miscellaneous Projects | 2022 | $166,000 | $185,201 | 0% | $0 | 0% | $0 |

| POWER PROJECTS | YEAR | 2011 COST | CONSTRUCTION YEAR COSTS | % TO GROWTH | INFLATED COST TO GROWTH | % IMPACT FEE FUNDED | SUBTOTALS |
|---|---|---|---|---|---|---|---|
| Fiber Optic Projects | 2013 | $31,000 | $31,623 | 100% | $31,623 | 100% | $31,623 |
| Fiber Optic Projects | 2014 | $32,000 | $32,970 | 100% | $32,970 | 100% | $32,970 |
| Fiber Optic Projects | 2015 | $33,000 | $34,340 | 100% | $34,340 | 100% | $34,340 |
| Fiber Optic Projects | 2016 | $34,000 | $35,734 | 100% | $35,734 | 100% | $35,734 |
| Fiber Optic Projects | 2017 | $35,000 | $37,153 | 100% | $37,153 | 100% | $37,153 |
| Fiber Optic Projects | 2018 | $36,000 | $38,597 | 100% | $38,597 | 100% | $38,597 |
| Fiber Optic Projects | 2019 | $37,000 | $40,066 | 100% | $40,066 | 100% | $40,066 |
| Fiber Optic Projects | 2020 | $38,000 | $41,560 | 100% | $41,560 | 100% | $41,560 |
| Fiber Optic Projects | 2021 | $37,000 | $40,871 | 100% | $40,871 | 100% | $40,871 |
| Fiber Optic Projects | 2022 | $38,000 | $42,395 | 100% | $42,395 | 100% | $42,395 |
| Miscellaneous Substation (Improve Equip) | 2013 | $12,000 | $12,241 | 100% | $12,241 | 100% | $12,241 |
| Miscellaneous Substation (Improve Equip) | 2014 | $25,000 | $25,758 | 100% | $25,758 | 100% | $25,758 |
| Miscellaneous Substation (Improve Equip) | 2016 | $1,008,000 | $1,059,418 | 0% | $0 | 0% | $0 |
| Miscellaneous Substation (Improve Equip) | 2018 | $1,141,000 | $1,223,306 | 0% | $0 | 0% | $0 |
| Miscellaneous Substation (Improve Equip) | 2020 | $1,210,000 | $1,323,359 | 100% | $1,323,359 | 100% | $1,323,359 |
| Miscellaneous Substation (Improve Equip) | 2021 | $1,175,000 | $1,297,931 | 0% | $0 | 0% | $0 |
| Miscellaneous Substation (Improve Equip) | 2022 | $1,210,000 | $1,349,959 | 100% | $1,349,959 | 100% | $1,349,959 |
| Ledges Transmission Line | 2022 | | $0 | 100% | $0 | 0% | $0 |
| Substation Capacitor Banks 69 kV and 15 kV | 2017 | $1,000,000 | $1,061,520 | 100% | $1,061,520 | 100% | $1,061,520 |
| Dixie 138 kV Tie - West Side | 2019 | $2,470,000 | $2,674,656 | 100% | $2,674,656 | 100% | $2,674,656 |
| Install 2nd 138 kV Transformer in Green Valley Sub | 2016 | $2,500,000 | $2,627,525 | 100% | $2,627,525 | 100% | $2,627,525 |
| Reconductor Twin Lakes Tap to Flood Street 69 kV | 2015 | $1,750,000 | $1,821,057 | 100% | $1,821,057 | 100% | $1,821,057 |
| Green Valley to the Lakes North Transmission Line | 2018 | $1,100,000 | $1,179,349 | 100% | $1,179,349 | 100% | $1,179,349 |
| **Total Distribution and Transmission** | | **$32,269,000** | **$34,509,165** | | **$28,307,799** | | **$27,594,646** |
| **TOTAL COSTS:** | | **$34,561,776** | **$36,962,061** | | **$29,534,247** | | **$28,821,094** |

TABLE 5.2: SUMMARY OF FUTURE POWER CAPITAL PROJECT COSTS

| SERVICE | COST OF FUTURE CAPITAL PROJECTS * | % OF TOTAL COSTS TO GROWTH & IMPACT FEES** | TOTAL COSTS TO GROWTH & IMPACT FEE |
|---|---|---|---|
| Generation Additions | $2,452,897 | 50% | $1,226,448 |
| Distribution and Transmission | $34,509,165 | 80% | $27,594,646 |

** The Cost of Future Capital Projects includes 1% annual construction inflation. **Generation additions are being allocated 50% to growth and the other 50% to replace depreciated equipment. The distribution and transmission is being allocated 80%, which is the aggregate percentage of all the projects listed in* ***TABLE 5.1****. Some of the projects are only being partially allocated to growth because some of the funds will be spent on replacement of existing equipment (i.e. meters and AMR).*

The City of St. George Energy Services Department has prepared this capital plan using capital project and engineering data, planning analysis and other information provided by the Energy Services staff. The City has provided all future capital project data including project descriptions and estimated project costs. The accuracy and correctness of this plan is contingent upon the accuracy of the data and assumptions. Any deviations or

changes in the assumptions due to changes in the economy or other relevant information used by the City for this study may cause this plan to be inaccurate and may require modifications.

## SYSTEM VS. PROJECT IMPROVEMENTS

System improvements are defined as existing and future public facilities that are intended to provide services to service areas within the community at large.[10] Project improvements are improvements and facilities that are planned and designed to provide service for a specific development (resulting from a development activity) and considered necessary for the use and convenience of the occupants or users of that development.[11] The Impact Fee Analysis may only include the costs of impacts on system improvements related to new growth within the proportionate share analysis. One example of a project improvement is The Ledges transmission line which has not been included in the calculation of the impact fee. However, impact fees will be used for the substations, etc since these are considered system improvements.

## FUNDING OF FUTURE FACILITIES

### UTILITY RATE REVENUES

Utility rate revenues serve as the primary funding mechanism within enterprise funds. Rates are established to ensure appropriate coverage of all operations and maintenance expenses, debt service coverage, and non-growth related capital project needs.

### GRANTS AND DONATIONS

The City does not anticipate receiving grants or donations to fund improvements currently contemplated in this IFFP. However, the impact fees will be adjusted if grants become available to reflect the grant monies received. A donor will be entitled to a reimbursement for the value of the system improvements funded through impact fees if donations are made by new development. **SECTION 6** further addresses proposed credits owed to development.

### IMPACT FEE REVENUES

Impact fees have become a logical mechanism for funding growth-related infrastructure. Impact fees are charged to ensure that new growth pays its proportionate share of the costs for the development of public infrastructure. Impact fee revenues can also be attributed to the future expansion of public infrastructure if the revenues are used to maintain an existing level of service. Increases to an existing level of service cannot be funded with impact fee revenues. Analysis is required to accurately assess the true impact of a particular user upon the City infrastructure and to prevent existing users from subsidizing new growth. The following paragraphs discuss other issues pertaining to impact fees. Impact fee revenues are generally considered non-operating revenues and help offset future capital costs.

### DEBT FINANCING

In the event the City has not accumulated sufficient impact fees to pay for the construction of time sensitive or urgent capital projects needed to accommodate new growth, the City must look to revenue sources other than impact fees for funding. The Impact Fees Act allows for the costs related to the financing of future capital projects to be legally included in the impact fee. This allows the City to finance and quickly construct infrastructure for new development and reimburse itself later from impact fee revenues for the costs of issuing debt. However, at the request of the City, no financing costs are included in this analysis.

## EQUITY OF IMPACT FEES

Impact fees are intended to recover the costs of capital infrastructure that relate to future growth. The impact fee calculations are structured for impact fees to fund 100% of the growth-related facilities identified in the proportionate share analysis as presented in the impact fee analysis. Even so, there may be years that impact fee revenues cannot cover the annual growth-related expenses. In those years, other revenues such as general utility

[10] 11-36a-102(20)
[11] 11-36a102(13)

rate revenues will be used to make up any annual deficits. Any borrowed funds are to be repaid in their entirety through impact fees.

## NECESSITY OF IMPACT FEES

An entity may only impose impact fees on development activity if the entity's plan for financing system improvements establishes that impact fees are necessary to achieve parity between existing and new development. This analysis has identified the improvements to public facilities and the funding mechanisms to complete the suggested improvements. Impact fees are identified as a necessary funding mechanism to help offset the costs of new capital improvements related to new growth. In addition, alternative funding mechanisms are identified to help offset the cost of future capital improvements.

# SECTION 6: POWER IMPACT FEE CALCULATION

## PROPOSED POWER IMPACT FEES

The calculation of impact fees relies upon the information contained in this analysis. Impact fees are calculated based on many variables centered on proportionality and level of service. The following paragraph briefly discusses the methodology for calculating impact fees.

### PLAN BASED (FEE BASED ON DEFINED CIP)

Impact fees can be calculated using a specific set of costs specified for future development. The improvements are identified in the IFFP, CFP or CIP as growth related projects. The total project costs are divided by the total demand units the projects are designed to serve. Under this methodology, it is important to identify the existing level of service and determine any excess capacity in existing facilities that could serve new growth.

### POWER IMPACT FEE CALCULATION

Based on the growth-related projects, as well as the applicable buy-in fee, the cost per new kW is estimated at $858, as described below in **TABLE 6.1**.

TABLE 6.1: ILLUSTRATION OF COST PER NEW KW

| POWER PROJECTS | TOTAL COSTS WITHIN IFFP HORIZON | % GROWTH RELATED & IMPACT FEE FUNDED | GROWTH RELATED & IMPACT FEE FUNDED COSTS | GROWTH RELATED KW | COST PER NEW KW |
|---|---|---|---|---|---|
| **CAPITAL PROJECTS** | | | | | |
| Generation Additions | $2,452,897 | 50% | $1,226,448 | 41,068 | $29.86 |
| Distribution and Transmission | $34,509,165 | 80% | $27,594,646 | 41,068 | $671.93 |
| Sub-Total Capital Projects Cost | $36,962,061 | | $28,821,094 | | $701.79 |
| **BUY-IN** | | | | | |
| Green Valley | $11,680,125 | 67% | $7,786,750 | 50,000 | $155.73 |
| Sub-Total Buy-In Cost | $11,680,125 | | $7,786,750 | | $155.73 |
| **OTHER** | | | | | |
| Professional Expense[12] | $9,675 | 100% | $9,675 | 25,043 | $0.39 |
| Sub-Total Other Cost | $9,675 | | $9,675 | | $0.39 |
| **Total[13]** | **$48,651,861** | | **$36,617,519** | | **$857.91** |

The fee per kW is then applied to the general usage statistics for residential and commercial users, as shown in the **TABLE 6.2, TABLE 6.3** and **TABLE 6.4** below.

TABLE 6.2: ILLUSTRATION OF RESIDENTIAL IMPACT FEE

| SERVICE DESCRIPTION | EST. KW | COST PER KW | IMPACT FEE | 2006 FEE[14] | % CHANGE |
|---|---|---|---|---|---|
| 100 Amp - 240/120 V | 4.25 | $858 | $3,646 | $2,790 | 31% |
| 200 Amp - 240/120 V | 5.25 | $858 | $4,504 | $3,446 | 31% |
| 400 Amp - 240/120 V | 9.00 | $858 | $7,721 | $5,908 | 31% |

[12] This is the actual cost to update the IFFP and IFA. The City can use this portion of the impact fee to reimburse itself for the expense of updating the IFFP and IFA. The cost is divided over the new kWs generated in the next six years.
[13] As of June 30, 2013 the electric utility impact fee fund balance was negative and thus not shown in the calculation of the impact fee above.
[14] When the existing fee was adopted in 2006, it was adopted at 75 percent of what was recommended.

TABLE 6.3: ILLUSTRATION OF COMMERCIAL IMPACT FEE

| SERVICE DESCRIPTION | PANEL RATING | 100% PANEL KVA | AVG PANEL LOADING | AVG PEAK DEMAND @ PANEL (KVA) | EST. CUSTOMER CLASS DIVERSITY | EST. AVERAGE DIVERSIFIED KVA |
|---|---|---|---|---|---|---|
| **Single Phase Service** | | | | | | |
| 240/120 V | 200 | 48 | 30% | 14.40 | 55% | 7.92 |
| | 400 | 96 | 30% | 28.80 | 55% | 15.84 |
| **Three Phase Service** | | | | | | |
| 208Y/120 V | 200 | 72 | 40% | 28.82 | 55% | 15.85 |
| | 400 | 144 | 40% | 57.64 | 55% | 31.70 |
| | 800 | 288 | 40% | 115.29 | 55% | 63.41 |
| | 1,200 | 432 | 40% | 172.93 | 55% | 95.11 |
| | 2,000 | 721 | 40% | 288.21 | 55% | 158.52 |
| 480Y/277 V | 200 | 166 | 40% | 66.51 | 55% | 36.58 |
| | 400 | 333 | 40% | 133.02 | 55% | 73.16 |
| | 800 | 665 | 40% | 266.04 | 55% | 146.32 |
| | 1,200 | 998 | 40% | 399.06 | 55% | 219.49 |
| | 2,000 | 1,663 | 40% | 665.11 | 55% | 365.81 |

TABLE 6.4: ILLUSTRATION OF COMMERCIAL IMPACT FEE (CONT.)

| SERVICE DESCRIPTION | EST. AVERAGE DIVERSIFIED KVA | ESTIMATED DIVERSIFIED KW | COST PER KW | IMPACT FEE | 2006 FEE | % CHANGE |
|---|---|---|---|---|---|---|
| **Single Phase Service** | | | | | | |
| 240/120 V | 7.92 | 7.13 | $858 | $6,115 | $4,679 | 31% |
| | 15.84 | 14.26 | $858 | $12,230 | $9,358 | 31% |
| **Three Phase Service** | | | | | | |
| 208Y/120 V | 15.85 | 14.27 | $858 | $12,239 | $9,365 | 31% |
| | 31.70 | 28.53 | $858 | $24,479 | $18,731 | 31% |
| | 63.41 | 57.07 | $858 | $48,958 | $37,462 | 31% |
| | 95.11 | 85.60 | $858 | $73,437 | $56,192 | 31% |
| | 158.52 | 142.67 | $858 | $122,395 | $93,654 | 31% |
| 480Y/277 V | 36.58 | 32.92 | $858 | $28,245 | $21,612 | 31% |
| | 73.16 | 65.85 | $858 | $56,490 | $43,225 | 31% |
| | 146.32 | 131.69 | $858 | $112,980 | $86,450 | 31% |
| | 219.49 | 197.54 | $858 | $169,469 | $129,675 | 31% |
| | 365.81 | 329.23 | $858 | $282,449 | $216,125 | 31% |

### NON-STANDARD IMPACT FEES

The proposed fees are based upon growth in kWs. The City reserves the right under the Impact Fees Act to assess an adjusted fee that more closely matches the true impact that the land use will have upon public facilities.[15] This adjustment could result in a higher or lower impact fee if the City determines that a particular user may create a different impact than what is standard for its land use.

**Estimated Usage / 6.69 kWh * $858**

## CONSIDERATION OF ALL REVENUE SOURCES

The Impact Fees Act requires the proportionate share analysis to demonstrate that impact fees paid by new development are the most equitable method of funding growth-related infrastructure. See **SECTION 5** for further discussion regarding the consideration of revenue sources.

[15] UC 11-36a-402(1)(c)

## EXPENDITURE OF IMPACT FEES

Legislation requires that impact fees should be spent or encumbered with six years after each impact fee is paid. Impact fees collected in the next five to six years should be spent or encumbered on only those projects outlined in the IFFP as growth related costs to maintain the LOS or to reimburse existing development for excess capacity used.

## PROPOSED CREDITS OWED TO DEVELOPMENT

The Impact Fees Act requires that credits be paid back to development for future fees that will pay for growth-driven system projects included in the Impact Fee Facilities Plan that would otherwise be paid for through user fees. Credits may also be paid to developers who have constructed and donated system facilities to that City that are included in the IFFP in-lieu of impact fees. This situation does not apply to developer exactions or system improvements required to offset density or as a condition of development. Any project that a developer funds must be included in the IFFP if a credit is to be issued.

In the situation that a developer chooses to construct facilities found in the IFFP in-lieu of impact fees, the decision must be made through negotiation with the developer and the City on a case-by-case basis.

## GROWTH-DRIVEN EXTRAORDINARY COSTS

The City does not anticipate any extraordinary costs necessary to provide services to future development.

## SUMMARY OF TIME PRICE DIFFERENTIAL

The Impact Fees Act allows for the inclusion of a time price differential to ensure that the future value of costs incurred at a later date are accurately calculated to include the costs of construction inflation. A one percent annual construction inflation adjustment is applied to projects completed after 2011 (the base year cost estimate).

## APPENDIX A: POWER SERVICE AREA

# APPENDIX A: IMPACT FEE SERVICE AREA

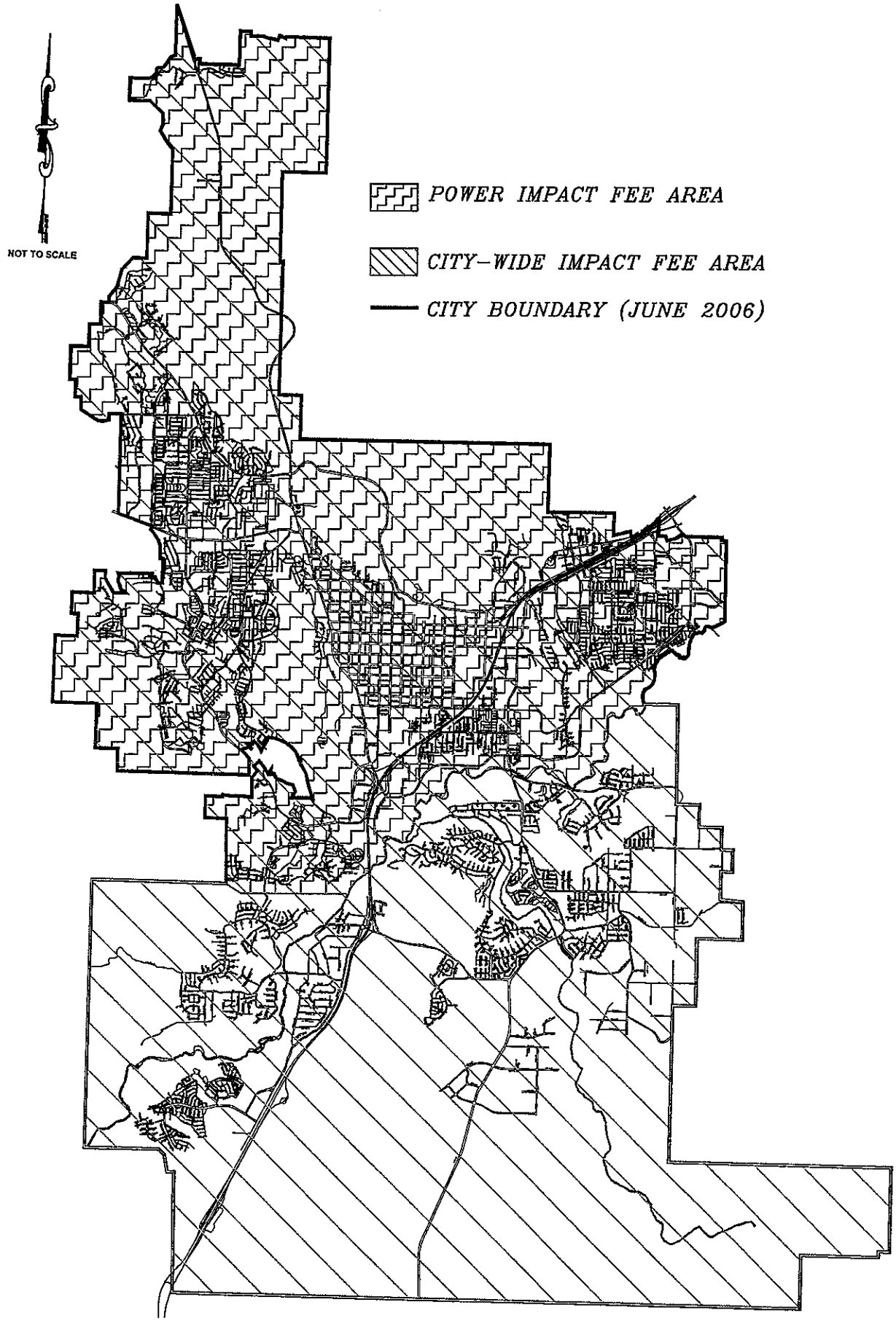

## APPENDIX B: TYPICAL LOAD PROFILES

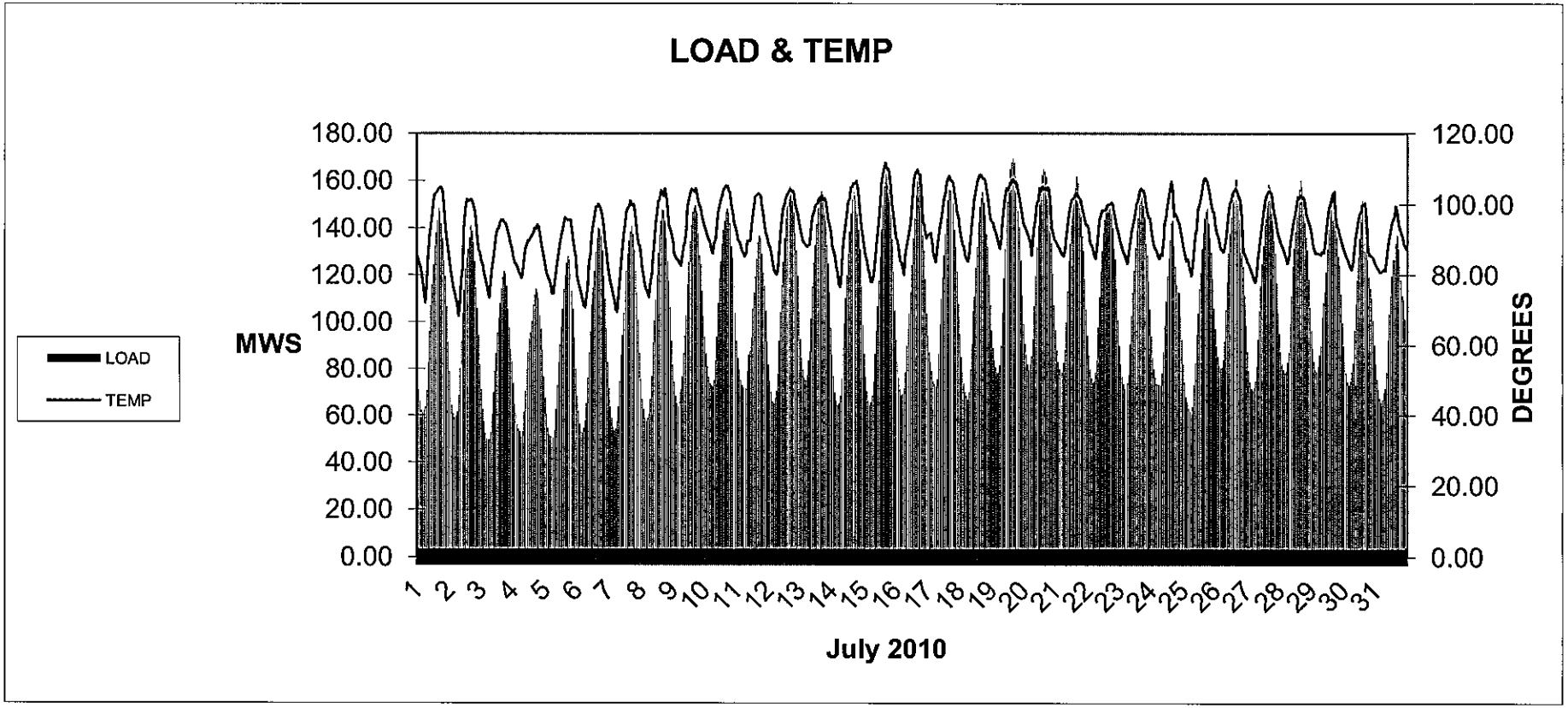
LOAD & TEMP
LOAD
TEMP
MWS
DEGREES
180.00
160.00
140.00
120.00
100.00
80.00
60.00
40.00
20.00
0.00
120.00
100.00
80.00
60.00
40.00
20.00
0.00
1 2 3 4 5 6 7 8 9 10 11 12 13 14 15 16 17 18 19 20 21 22 23 24 25 26 27 28 29 30 31
July 2010

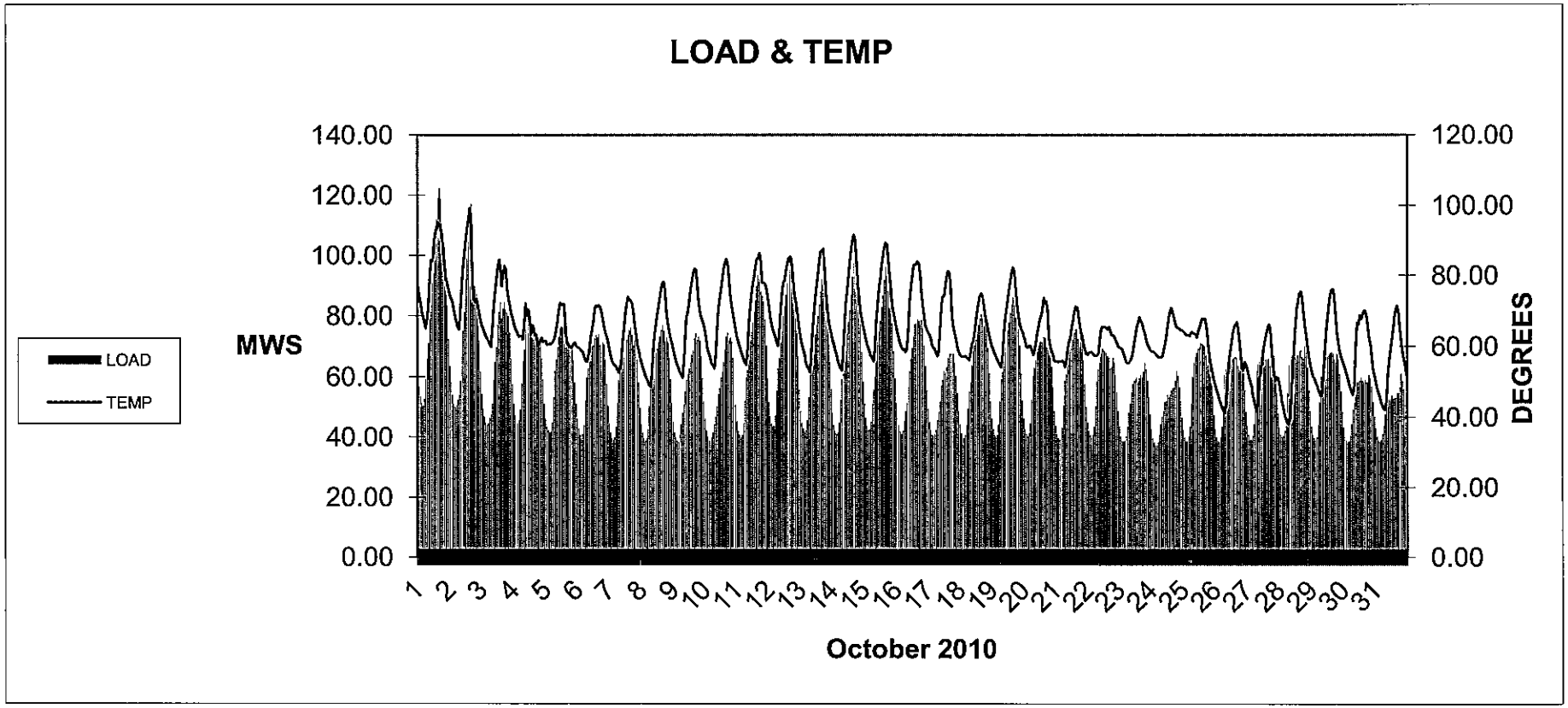
LOAD & TEMP
LOAD
TEMP
MWS
DEGREES
140.00
120.00
100.00
80.00
60.00
40.00
20.00
0.00
120.00
100.00
80.00
60.00
40.00
20.00
0.00
1 2 3 4 5 6 7 8 9 10 11 12 13 14 15 16 17 18 19 20 21 22 23 24 25 26 27 28 29 30 31
October 2010

| 2012 | July | August | September | October | November | December | January | February | March | April | May | June |
|---|---|---|---|---|---|---|---|---|---|---|---|---|
| Hours | 416.00 | 416.00 | 400.00 | 416.00 | 384.00 | 416.00 | 400.00 | 400.00 | 432.00 | 400.00 | 416.00 | 416.00 |
| # Base hours | 291.20 | 291.20 | 280.00 | 291.20 | 268.80 | 291.20 | 320.00 | 320.00 | 345.60 | 320.00 | 332.80 | 332.80 |
| Base load MWs | 114 | 97 | 85 | 66 | 68 | 72 | 69 | 66 | 58 | 57 | 56 | 76 |
| 44MWs | | | | 413.00 | | | | | | | | |
| 45 | | | | 413.00 | | | | | | | | |
| 46 | | | | 410.00 | 383.00 | | | | | | | |
| 47 | | | | 410.00 | 383.00 | | | | | | | |
| 48 | | | 397.00 | 408.00 | 382.00 | | | | | | | |
| 49 | | | 395.00 | 405.00 | 382.00 | | | | | | | |
| 50 | | | 394.00 | 403.00 | 381.00 | | | | | | | |
| 51 | 416.00 | | 394.00 | 402.00 | 381.00 | | | | | | | |
| 52 | 416.00 | 416.00 | 394.00 | 397.00 | 381.00 | | | | | | | |
| 53 | 414.00 | 414.00 | 392.00 | 391.00 | 377.00 | | | | | | | |
| 54 | 414.00 | 414.00 | 391.00 | 383.00 | 373.00 | | | | | | | |
| 55 | 414.00 | 412.00 | 389.00 | 372.00 | 368.00 | | | | | | | |
| 56 | 412.00 | 412.00 | 387.00 | 368.00 | 365.00 | 406.00 | 400.00 | 390.00 | 377.00 | 334.00 | 332.00 | 375.00 |
| 57 | 412.00 | 411.00 | 384.00 | 364.00 | 362.00 | 402.00 | 400.00 | 389.00 | 361.00 | 316.00 | 330.00 | 371.00 |
| 58 | 412.00 | 410.00 | 382.00 | 359.00 | 355.00 | 394.00 | 398.00 | 387.00 | 352.00 | 304.00 | 323.00 | 370.00 |
| 59 | 412.00 | 409.00 | 378.00 | 354.00 | 349.00 | 389.00 | 397.00 | 385.00 | 340.00 | 294.00 | 316.00 | 367.00 |
| 60 | 411.00 | 405.00 | 374.00 | 352.00 | 346.00 | 385.00 | 395.00 | 382.00 | 324.00 | 282.00 | 305.00 | 358.00 |
| 61 | 410.00 | 403.00 | 370.00 | 342.00 | 342.00 | 381.00 | 392.00 | 377.00 | 310.00 | 270.00 | 285.00 | 358.00 |
| 62 | 410.00 | 403.00 | 366.00 | 336.00 | 336.00 | 375.00 | 390.00 | 372.00 | 300.00 | 265.00 | 276.00 | 354.00 |
| 63 | 410.00 | 400.00 | 363.00 | 324.00 | 328.00 | 370.00 | 388.00 | 365.00 | 291.00 | 253.00 | 258.00 | 351.00 |
| 64 | 408.00 | 400.00 | 357.00 | 313.00 | 319.00 | 366.00 | 387.00 | 358.00 | 262.00 | 239.00 | 243.00 | 347.00 |
| 65 | 406.00 | 395.00 | 354.00 | 301.00 | 309.00 | 355.00 | 382.00 | 344.00 | 223.00 | 220.00 | 225.00 | 343.00 |
| 66 | 405.00 | 393.00 | 348.00 | 293.00 | 301.00 | 349.00 | 371.00 | 321.00 | 177.00 | 191.00 | 201.00 | 341.00 |
| 67 | 402.00 | 392.00 | 343.00 | 279.00 | 280.00 | 336.00 | 355.00 | 293.00 | 144.00 | 160.00 | 183.00 | 335.00 |
| 68 | 401.00 | 391.00 | 341.00 | 254.00 | 261.00 | 331.00 | 346.00 | 263.00 | 108.00 | 115.00 | 169.00 | 331.00 |
| 69 | 401.00 | 389.00 | 339.00 | 226.00 | 232.00 | 319.00 | 329.00 | 243.00 | 84.00 | 91.00 | 148.00 | 329.00 |
| 70 | 401.00 | 388.00 | 332.00 | 209.00 | 207.00 | 296.00 | 312.00 | 225.00 | 64.00 | 72.00 | 134.00 | 322.00 |
| 71 | 399.00 | 386.00 | 328.00 | 196.00 | 175.00 | 282.00 | 292.00 | 212.00 | 50.00 | 52.00 | 113.00 | 316.00 |
| 72 | 396.00 | 384.00 | 322.00 | 180.00 | 154.00 | 263.00 | 273.00 | 188.00 | 29.00 | 41.00 | 110.00 | 310.00 |
| 73 | 395.00 | 381.00 | 320.00 | 159.00 | 128.00 | 240.00 | 252.00 | 165.00 | 20.00 | 29.00 | 102.00 | 306.00 |
| 74 | 391.00 | 375.00 | 316.00 | 142.00 | 103.00 | 215.00 | 231.00 | 144.00 | 12.00 | 25.00 | 93.00 | 301.00 |
| 75 | 388.00 | 371.00 | 314.00 | 127.00 | 87.00 | 194.00 | 209.00 | 132.00 | 6.00 | 22.00 | 84.00 | 292.00 |
| 76 | 388.00 | 368.00 | 312.00 | 117.00 | 74.00 | 174.00 | 191.00 | 110.00 | 5.00 | 17.00 | 75.00 | 290.00 |
| 77 | 386.00 | 366.00 | 311.00 | 106.00 | 57.00 | 156.00 | 170.00 | 92.00 | 4.00 | 12.00 | 66.00 | 280.00 |
| 78 | 383.00 | 365.00 | 309.00 | 100.00 | 50.00 | 141.00 | 155.00 | 77.00 | 2.00 | 9.00 | 64.00 | 274.00 |
| 79 | 381.00 | 361.00 | 304.00 | 90.00 | 40.00 | 117.00 | 143.00 | 70.00 | 1.00 | 2.00 | 58.00 | 269.00 |
| 80 | 380.00 | 356.00 | 297.00 | 82.00 | 36.00 | 92.00 | 130.00 | 57.00 | 0.00 | 2.00 | 52.00 | 260.00 |
| 81 | 377.00 | 351.00 | 294.00 | 77.00 | 27.00 | 66.00 | 120.00 | 50.00 | 0.00 | 0.00 | 44.00 | 253.00 |
| 82 | 374.00 | 349.00 | 290.00 | 69.00 | 21.00 | 43.00 | 106.00 | 44.00 | 0.00 | 0.00 | 38.00 | 250.00 |
| 83 | 371.00 | 344.00 | 288.00 | 63.00 | 17.00 | 29.00 | 97.00 | 38.00 | 0.00 | 0.00 | 33.00 | 243.00 |
| 84 | 369.00 | 337.00 | 285.00 | 56.00 | 14.00 | 22.00 | 83.00 | 32.00 | 0.00 | 0.00 | 23.00 | 237.00 |
| 85 | 368.00 | 333.00 | 282.00 | 55.00 | 12.00 | 16.00 | 73.00 | 28.00 | 0.00 | 0.00 | 20.00 | 233.00 |
| 86 | 367.00 | 331.00 | 273.00 | 50.00 | 8.00 | 11.00 | 64.00 | 24.00 | 0.00 | 0.00 | 14.00 | 228.00 |
| 87 | 360.00 | 328.00 | 270.00 | 46.00 | 6.00 | 7.00 | 58.00 | 23.00 | 0.00 | 0.00 | 12.00 | 220.00 |
| 88 | 358.00 | 326.00 | 264.00 | 42.00 | 4.00 | 2.00 | 46.00 | 20.00 | 0.00 | 0.00 | 7.00 | 213.00 |
| 89 | 358.00 | 323.00 | 256.00 | 39.00 | 2.00 | 0.00 | 36.00 | 17.00 | 0.00 | 0.00 | 5.00 | 206.00 |
| 90 | 354.00 | 321.00 | 252.00 | 34.00 | 2.00 | 0.00 | 29.00 | 16.00 | 0.00 | 0.00 | 4.00 | 201.00 |
| 91 | 348.00 | 316.00 | 244.00 | 30.00 | 0.00 | 0.00 | 23.00 | 14.00 | 0.00 | 0.00 | 3.00 | 200.00 |
| 92 | 346.00 | 308.00 | 236.00 | 30.00 | 0.00 | 0.00 | 17.00 | 12.00 | 0.00 | 0.00 | 1.00 | 194.00 |
| 93 | 345.00 | 306.00 | 232.00 | 26.00 | 0.00 | 0.00 | 14.00 | 11.00 | 0.00 | 0.00 | 0.00 | 184.00 |
| 94 | 342.00 | 301.00 | 227.00 | 22.00 | 0.00 | 0.00 | 13.00 | 8.00 | 0.00 | 0.00 | 0.00 | 179.00 |
| 95 | 339.00 | 295.00 | 227.00 | 20.00 | 0.00 | 0.00 | 10.00 | 8.00 | 0.00 | 0.00 | 0.00 | 175.00 |
| 96 | 335.00 | 293.00 | 223.00 | 17.00 | 0.00 | 0.00 | 7.00 | 5.00 | 0.00 | 0.00 | 0.00 | 171.00 |
| 97 | 332.00 | 292.00 | 216.00 | 14.00 | 0.00 | 0.00 | 6.00 | 3.00 | 0.00 | 0.00 | 0.00 | 166.00 |
| 98 | 331.00 | 291.00 | 209.00 | 13.00 | 0.00 | 0.00 | 0.00 | 3.00 | 0.00 | 0.00 | 0.00 | 162.00 |
| 99 | 328.00 | 285.00 | 203.00 | 11.00 | 0.00 | 0.00 | 0.00 | 2.00 | 0.00 | 0.00 | 0.00 | 158.00 |
| 100 | 325.00 | 282.00 | 195.00 | 10.00 | 0.00 | 0.00 | 0.00 | 1.00 | 0.00 | 0.00 | 0.00 | 152.00 |
| 101 | 323.00 | 279.00 | 189.00 | 9.00 | 0.00 | 0.00 | 0.00 | 0.00 | 0.00 | 0.00 | 0.00 | 149.00 |
| 102 | 319.00 | 274.00 | 181.00 | 8.00 | 0.00 | 0.00 | 0.00 | 0.00 | 0.00 | 0.00 | 0.00 | 145.00 |
| 103 | 319.00 | 269.00 | 177.00 | 8.00 | 0.00 | 0.00 | 0.00 | 0.00 | 0.00 | 0.00 | 0.00 | 141.00 |
| 104 | 317.00 | 264.00 | 170.00 | 8.00 | 0.00 | 0.00 | 0.00 | 0.00 | 0.00 | 0.00 | 0.00 | 140.00 |
| 105 | 314.00 | 262.00 | 164.00 | 8.00 | 0.00 | 0.00 | 0.00 | 0.00 | 0.00 | 0.00 | 0.00 | 135.00 |
| 106 | 313.00 | 257.00 | 158.00 | 6.00 | 0.00 | 0.00 | 0.00 | 0.00 | 0.00 | 0.00 | 0.00 | 131.00 |
| 107 | 311.00 | 256.00 | 153.00 | 6.00 | 0.00 | 0.00 | 0.00 | 0.00 | 0.00 | 0.00 | 0.00 | 127.00 |
| 108 | 308.00 | 249.00 | 146.00 | 6.00 | 0.00 | 0.00 | 0.00 | 0.00 | 0.00 | 0.00 | 0.00 | 117.00 |
| 109 | 302.00 | 248.00 | 138.00 | 6.00 | 0.00 | 0.00 | 0.00 | 0.00 | 0.00 | 0.00 | 0.00 | 113.00 |
| 110 | 299.00 | 243.00 | 130.00 | 6.00 | 0.00 | 0.00 | 0.00 | 0.00 | 0.00 | 0.00 | 0.00 | 110.00 |
| 111 | 296.00 | 242.00 | 124.00 | 5.00 | 0.00 | 0.00 | 0.00 | 0.00 | 0.00 | 0.00 | 0.00 | 106.00 |
| 112 | 291.00 | 240.00 | 119.00 | 5.00 | 0.00 | 0.00 | 0.00 | 0.00 | 0.00 | 0.00 | 0.00 | 105.00 |
| 113 | 289.00 | 236.00 | 115.00 | 5.00 | 0.00 | 0.00 | 0.00 | 0.00 | 0.00 | 0.00 | 0.00 | 99.00 |
| 114 | 289.00 | 231.00 | 106.00 | 4.00 | 0.00 | 0.00 | 0.00 | 0.00 | 0.00 | 0.00 | 0.00 | 96.00 |
| 115 | 284.00 | 224.00 | 98.00 | 4.00 | 0.00 | 0.00 | 0.00 | 0.00 | 0.00 | 0.00 | 0.00 | 89.00 |
| 116 | 281.00 | 220.00 | 95.00 | 3.00 | 0.00 | 0.00 | 0.00 | 0.00 | 0.00 | 0.00 | 0.00 | 84.00 |
| 117 | 279.00 | 215.00 | 84.00 | 3.00 | 0.00 | 0.00 | 0.00 | 0.00 | 0.00 | 0.00 | 0.00 | 82.00 |
| 118 | 271.00 | 212.00 | 77.00 | 3.00 | 0.00 | 0.00 | 0.00 | 0.00 | 0.00 | 0.00 | 0.00 | 78.00 |
| 119 | 267.00 | 206.00 | 72.00 | 3.00 | 0.00 | 0.00 | 0.00 | 0.00 | 0.00 | 0.00 | 0.00 | 76.00 |
| 120 | 262.00 | 201.00 | 69.00 | 3.00 | 0.00 | 0.00 | 0.00 | 0.00 | 0.00 | 0.00 | 0.00 | 73.00 |
| 121 | 258.00 | 195.00 | 66.00 | 3.00 | 0.00 | 0.00 | 0.00 | 0.00 | 0.00 | 0.00 | 0.00 | 66.00 |
| 122 | 257.00 | 190.00 | 63.00 | 3.00 | 0.00 | 0.00 | 0.00 | 0.00 | 0.00 | 0.00 | 0.00 | 66.00 |
| 123 | 254.00 | 185.00 | 57.00 | 1.00 | 0.00 | 0.00 | 0.00 | 0.00 | 0.00 | 0.00 | 0.00 | 62.00 |
| 124 | 252.00 | 183.00 | 52.00 | 1.00 | 0.00 | 0.00 | 0.00 | 0.00 | 0.00 | 0.00 | 0.00 | 56.00 |
| 125 | 245.00 | 178.00 | 49.00 | 1.00 | 0.00 | 0.00 | 0.00 | 0.00 | 0.00 | 0.00 | 0.00 | 53.00 |
| 126 | 245.00 | 173.00 | 40.00 | 0.00 | 0.00 | 0.00 | 0.00 | 0.00 | 0.00 | 0.00 | 0.00 | 48.00 |
| 127 | 237.00 | 168.00 | 39.00 | 0.00 | 0.00 | 0.00 | 0.00 | 0.00 | 0.00 | 0.00 | 0.00 | 43.00 |
| 128 | 235.00 | 162.00 | 37.00 | 0.00 | 0.00 | 0.00 | 0.00 | 0.00 | 0.00 | 0.00 | 0.00 | 42.00 |
| 129 | 233.00 | 157.00 | 35.00 | 0.00 | 0.00 | 0.00 | 0.00 | 0.00 | 0.00 | 0.00 | 0.00 | 37.00 |
| 130 | 228.00 | 147.00 | 30.00 | 0.00 | 0.00 | 0.00 | 0.00 | 0.00 | 0.00 | 0.00 | 0.00 | 34.00 |
| 131 | 222.00 | 143.00 | 24.00 | 0.00 | 0.00 | 0.00 | 0.00 | 0.00 | 0.00 | 0.00 | 0.00 | 31.00 |
| 132 | 215.00 | 138.00 | 20.00 | 0.00 | 0.00 | 0.00 | 0.00 | 0.00 | 0.00 | 0.00 | 0.00 | 29.00 |
| 133 | 212.00 | 132.00 | 17.00 | 0.00 | 0.00 | 0.00 | 0.00 | 0.00 | 0.00 | 0.00 | 0.00 | 28.00 |
| 134 | 207.00 | 123.00 | 16.00 | 0.00 | 0.00 | 0.00 | 0.00 | 0.00 | 0.00 | 0.00 | 0.00 | 25.00 |
| 135 | 200.00 | 121.00 | 14.00 | 0.00 | 0.00 | 0.00 | 0.00 | 0.00 | 0.00 | 0.00 | 0.00 | 22.00 |
| 136 | 195.00 | 115.00 | 13.00 | 0.00 | 0.00 | 0.00 | 0.00 | 0.00 | 0.00 | 0.00 | 0.00 | 20.00 |
| 137 | 185.00 | 107.00 | 12.00 | 0.00 | 0.00 | 0.00 | 0.00 | 0.00 | 0.00 | 0.00 | 0.00 | 18.00 |
| 138 | 180.00 | 104.00 | 10.00 | 0.00 | 0.00 | 0.00 | 0.00 | 0.00 | 0.00 | 0.00 | 0.00 | 16.00 |
| 139 | 176.00 | 94.00 | 8.00 | 0.00 | 0.00 | 0.00 | 0.00 | 0.00 | 0.00 | 0.00 | 0.00 | 15.00 |
| 140 | 171.00 | 86.00 | 7.00 | 0.00 | 0.00 | 0.00 | 0.00 | 0.00 | 0.00 | 0.00 | 0.00 | 11.00 |
| 141 | 167.00 | 78.00 | 6.00 | 0.00 | 0.00 | 0.00 | 0.00 | 0.00 | 0.00 | 0.00 | 0.00 | 11.00 |
| 142 | 157.00 | 70.00 | 6.00 | 0.00 | 0.00 | 0.00 | 0.00 | 0.00 | 0.00 | 0.00 | 0.00 | 11.00 |
| 143 | 151.00 | 66.00 | 4.00 | 0.00 | 0.00 | 0.00 | 0.00 | 0.00 | 0.00 | 0.00 | 0.00 | 9.00 |
| 144 | 143.00 | 63.00 | 4.00 | 0.00 | 0.00 | 0.00 | 0.00 | 0.00 | 0.00 | 0.00 | 0.00 | 5.00 |
| 145 | 138.00 | 59.00 | 3.00 | 0.00 | 0.00 | 0.00 | 0.00 | 0.00 | 0.00 | 0.00 | 0.00 | 4.00 |
| 146 | 133.00 | 53.00 | 2.00 | 0.00 | 0.00 | 0.00 | 0.00 | 0.00 | 0.00 | 0.00 | 0.00 | 2.00 |
| 147 | 127.00 | 49.00 | 2.00 | 0.00 | 0.00 | 0.00 | 0.00 | 0.00 | 0.00 | 0.00 | 0.00 | 2.00 |
| 148 | 120.00 | 41.00 | 2.00 | 0.00 | 0.00 | 0.00 | 0.00 | 0.00 | 0.00 | 0.00 | 0.00 | 1.00 |
| 149 | 117.00 | 38.00 | 2.00 | 0.00 | 0.00 | 0.00 | 0.00 | 0.00 | 0.00 | 0.00 | 0.00 | 0.00 |
| 150 | 112.00 | 36.00 | 1.00 | 0.00 | 0.00 | 0.00 | 0.00 | 0.00 | 0.00 | 0.00 | 0.00 | 0.00 |
| 151 | 105.00 | 32.00 | 1.00 | 0.00 | 0.00 | 0.00 | 0.00 | 0.00 | 0.00 | 0.00 | 0.00 | 0.00 |
| 152 | 101.00 | 29.00 | 0.00 | 0.00 | 0.00 | 0.00 | 0.00 | 0.00 | 0.00 | 0.00 | 0.00 | 0.00 |
| 153 | 95.00 | 24.00 | 0.00 | 0.00 | 0.00 | 0.00 | 0.00 | 0.00 | 0.00 | 0.00 | 0.00 | 0.00 |
| 154 | 84.00 | 17.00 | 0.00 | 0.00 | 0.00 | 0.00 | 0.00 | 0.00 | 0.00 | 0.00 | 0.00 | 0.00 |
| 155 | 80.00 | 11.00 | 0.00 | 0.00 | 0.00 | 0.00 | 0.00 | 0.00 | 0.00 | 0.00 | 0.00 | 0.00 |
| 156 | 73.00 | 9.00 | 0.00 | 0.00 | 0.00 | 0.00 | 0.00 | 0.00 | 0.00 | 0.00 | 0.00 | 0.00 |
| 157 | 64.00 | 6.00 | 0.00 | 0.00 | 0.00 | 0.00 | 0.00 | 0.00 | 0.00 | 0.00 | 0.00 | 0.00 |
| 158 | 58.00 | 3.00 | 0.00 | 0.00 | 0.00 | 0.00 | 0.00 | 0.00 | 0.00 | 0.00 | 0.00 | 0.00 |
| 159 | 53.00 | 1.00 | 0.00 | 0.00 | 0.00 | 0.00 | 0.00 | 0.00 | 0.00 | 0.00 | 0.00 | 0.00 |
| 160 | 48.00 | 0.00 | 0.00 | 0.00 | 0.00 | 0.00 | 0.00 | 0.00 | 0.00 | 0.00 | 0.00 | 0.00 |
| 161 | 41.00 | 0.00 | 0.00 | 0.00 | 0.00 | 0.00 | 0.00 | 0.00 | 0.00 | 0.00 | 0.00 | 0.00 |
| 162 | 37.00 | 0.00 | 0.00 | 0.00 | 0.00 | 0.00 | 0.00 | 0.00 | 0.00 | 0.00 | 0.00 | 0.00 |
| 163 | 31.00 | 0.00 | 0.00 | 0.00 | 0.00 | 0.00 | 0.00 | 0.00 | 0.00 | 0.00 | 0.00 | 0.00 |
| 164 | 27.00 | 0.00 | 0.00 | 0.00 | 0.00 | 0.00 | 0.00 | 0.00 | 0.00 | 0.00 | 0.00 | 0.00 |
| 165 | 22.00 | 0.00 | 0.00 | 0.00 | 0.00 | 0.00 | 0.00 | 0.00 | 0.00 | 0.00 | 0.00 | 0.00 |
| 166 | 20.00 | 0.00 | 0.00 | 0.00 | 0.00 | 0.00 | 0.00 | 0.00 | 0.00 | 0.00 | 0.00 | 0.00 |
| 167 | 17.00 | 0.00 | 0.00 | 0.00 | 0.00 | 0.00 | 0.00 | 0.00 | 0.00 | 0.00 | 0.00 | 0.00 |
| 168 | 14.00 | 0.00 | 0.00 | 0.00 | 0.00 | 0.00 | 0.00 | 0.00 | 0.00 | 0.00 | 0.00 | 0.00 |
| 169 | 9.00 | 0.00 | 0.00 | 0.00 | 0.00 | 0.00 | 0.00 | 0.00 | 0.00 | 0.00 | 0.00 | 0.00 |
| 170 | 7.00 | 0.00 | 0.00 | 0.00 | 0.00 | 0.00 | 0.00 | 0.00 | 0.00 | 0.00 | 0.00 | 0.00 |
| 171 | 6.00 | 0.00 | 0.00 | 0.00 | 0.00 | 0.00 | 0.00 | 0.00 | 0.00 | 0.00 | 0.00 | 0.00 |
| 172 | 3.00 | 0.00 | 0.00 | 0.00 | 0.00 | 0.00 | 0.00 | 0.00 | 0.00 | 0.00 | 0.00 | 0.00 |
| 173 | 3.00 | 0.00 | 0.00 | 0.00 | 0.00 | 0.00 | 0.00 | 0.00 | 0.00 | 0.00 | 0.00 | 0.00 |
| 174 | 3.00 | 0.00 | 0.00 | 0.00 | 0.00 | 0.00 | 0.00 | 0.00 | 0.00 | 0.00 | 0.00 | 0.00 |
| 175 | 1.00 | 0.00 | 0.00 | 0.00 | 0.00 | 0.00 | 0.00 | 0.00 | 0.00 | 0.00 | 0.00 | 0.00 |
| 176 | 1.00 | 0.00 | 0.00 | 0.00 | 0.00 | 0.00 | 0.00 | 0.00 | 0.00 | 0.00 | 0.00 | 0.00 |

Coal Base DGT

Hydro CRSP/Jordanelk

Solar

N Gas Millcreek I

N Gas Millcreek II

## 2010 through 2025 JULY

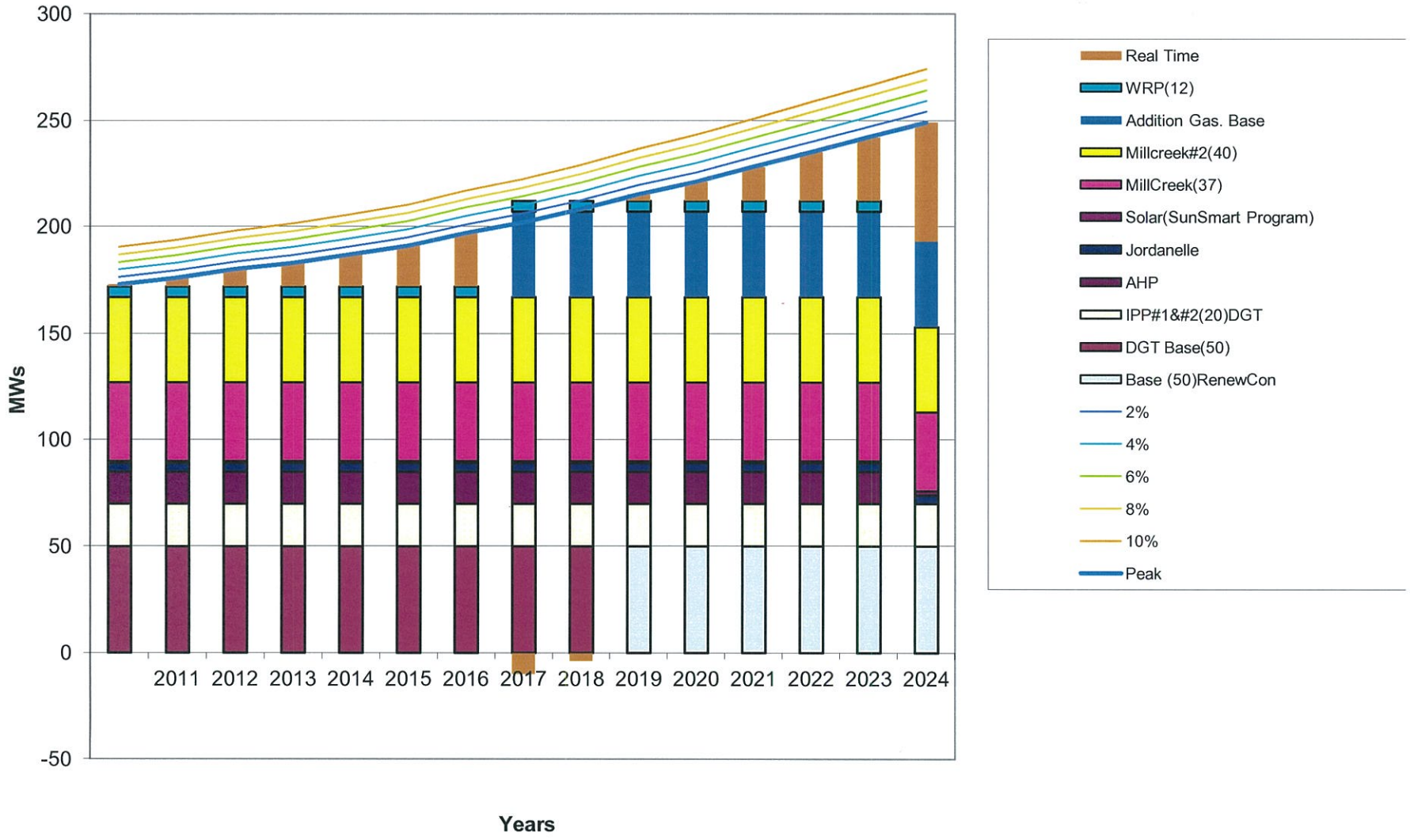

# APPENDIX C: JOINT PLAN STUDY

April 2011

# Southwest Utah Joint Planning Study Report

PACIFICORP
A MIDAMERICAN ENERGY HOLDINGS COMPANY

ROCKY MOUNTAIN POWER
A DIVISION OF PACIFICORP

UAMPS
Utah Associated Municipal Power Systems
SMARTENERGY

DESERET POWER
ELECTRIC COOPERATIVE

PACIFICORP A MIDAMERICAN ENERGY HOLDINGS COMPANY | ROCKY MOUNTAIN POWER A DIVISION OF PACIFICORP | UAMPS Utah Associated Municipal Power Systems | SMARTENERGY | DESERET POWER ELECTRIC COOPERATIVE

April 7, 2011

Members of the Southwest Utah technical task force are pleased to provide the updated 2011 Southwest Utah Joint Planning Study Report.

The updated report was a significant joint effort by PacifiCorp, Rocky Mountain Power, Utah Associated Municipal Power Systems (and its members in Southwest Utah), and Deseret Power Electric Cooperative (and its member Dixie Escalante). This effort has been ongoing since 2007 to update the previous report. Special thanks go to the dedicated personnel in each of these organizations that were part of the study group.

Inside you will find a comprehensive study that outlines the next steps over 10 years and beyond that are needed to provide safe, adequate, reliable power to Southwest Utah. Meeting the growing electrical needs of this area will come with challenges, but, as a group, our focused efforts will overcome any issues we face.

We are all committed to delivering the recommendations in this report. But this report is only the beginning. It is a planning tool. It identifies issues and recommends how to address them. If the issues change, the Planning Study will also change, so that the electrical needs of Southwest Utah continue to be met.

Our acknowledgement and acceptance of this study as approved is noted by our signatures below.

Acknowledged and Agreed:

By PacifiCorp:

John A. Cupparo
Vice President – Transmission

By Rocky Mountain Power:

Douglas N. Bennion
Vice President - Engineering Services and Capital Investment

By Utah Associated Municipal Power

Marshall Empey
Manager of Operations and Planning

By Deseret Power Electric Cooperative:

Curt Winterfeld
Vice President, Marketing

# *Southwest Utah Technical Studies Group*

## *2011 Southwest Utah Joint Study Report*

**A Continuation of Prior Study Reports:**

***June 2009 Study Report***

***December 2007 Study Report***


**Technical Studies Group Contributors**

**Utah Associated Municipal Power Systems**

Rick Hansen – City of Saint George

Mike Velarde – Intermountain Consumer Professional Engineers Inc.

**Rocky Mountain Power**

Nathan Powell

**PacifiCorp**

Bill Hall

**Deseret Power Electric Cooperative**

Jim Tucker

**Dixie Escalante**

Colin Jack

## TABLE OF CONTENTS

***Executive Summary*** ..... ***2***
***Study Background*** ..... ***4***
***Study Criteria*** ..... ***5***
***Historical Loads*** ..... ***6***
***Load Projections*** ..... ***8***
***Recent Transmission System Improvements*** ..... ***10***
***Study Results*** ..... ***11***
***Conclusions*** ..... ***27***

## 1.0 Executive Summary

The 2011 joint study was initiated to update prior system build-out plans considering recent years of minimal system load growth and subsequent changes in the load projections for the area as well as recent changes that have occurred on the transmission system. This study also provides additional study details that made it possible to refine the joint plan and provide further details for upcoming joint projects

It is reaffirmed in this study that a new 345 kilovolt (kV) transmission route between Cedar City and Saint George with a new 345 kV delivery point in eastern Washington County is a vital long term project for the area that will serve a number of purposes (see 2007 and 2009 Study Reports) and because other viable options are extremely limited it is recommended that steps be taken now to secure this right-of-way.

This planning study is the product of the signatory organizations. The study establishes best recommendations to serve projected loads based on a single utility concept. The study does not establish the requirement for any party to fund projects.

The local transmission system in southwest Utah was analyzed year by year from 2011 to 2025. Most of the highlighted projects from previous studies continued and are depicted in this report with additional detail and updated in-service timeframes. Several changes to previously identified projects were included as well as a number of newly identified ones.

Updates to the study criteria were incorporated as well such as including short period overload (SPOL) ratings for several 138 kV lines and a modification to the 50 Megawatt (MW) threshold for adding looped transmission.

A detailed summary of the recommended system modifications is included in Section 7 in the report below with some of the highlights as follows:

- Expand the area with additional looped 138 kV transmission throughout the study period (see schedule on page 12)
- Establish a new 138 kV delivery point and 138/69 kV substation in west Hurricane around 2014 with future 345 kV capability
- Expand St. George substation to 345 kV operation and install a 345/138 kV transformer by 2015
- Energize a 4$^{th}$ circuit between Red Butte and St. George at 345 kV by 2015
- Re-conductor St. George-Fields 138 kV line with high temperature conductor by 2017
- Energize 2$^{nd}$ 345 kV circuit between Red Butte and St. George and add second 345/138 kV transformer at St. George by 2021
- Re-conductor St. George-Skyline #1 and #2 lines with high temperature conductor by 2022
- Construct new St. George-Hurricane 345 kV line (initially operated 138 kV) by 2023
- Construct Three Peaks-Hurricane 345 kV line to coincide with PacifiCorp Transmission requirements, energize St. George-Hurricane line at 345 kV, and install 345/138 kV transformation at proposed Hurricane West substation

This updated study also includes information in preparation for the upcoming 2011 summer peak season by simulating projected conditions and potential outage scenarios. The 2011 study results are included in Appendix C of this report providing details for each of the possible scenarios and their respective mitigation plans.

## 2.0 Study Background

The Southwest Utah Technical Task Force (SWTTF) was formed in 1987 as directed by the Public Service Commission of Utah with a purpose of having all southwest Utah electric utilities work and cooperate together regarding emergency outage planning and response and joint system planning. The primary goal of the task force is to ensure that service reliability in Washington County is maximized and, through joint planning, to identify ways to eliminate duplication of infrastructure.

Since the inception of this task force, several joint planning studies with actions have been completed with good success. In 2005 a Joint Operations Agreement (JOA) was entered into by UAMPS and PacifiCorp. Upon completion of Phase 1 and 2 under the JOA, an associated Integrated Transmission System (ITS) Operation and Maintenance Agreement was entered into in 2006 between UAMPS and PacifiCorp. These agreements were the first steps to enhancing service reliability and eliminating possible duplication of infrastructure to the area. As a result of continued growth in Washington County the present ITS capability is approaching capacity.

In 2007, an updated joint planning study was undertaken by the SWTTF to identify future system improvements to the ITS. The 2007 joint planning study was continued and updated in early 2009 and since then an updated study began in 2010 with the results included in this 2011 Southwest Utah Joint Study Report.

The purpose of this joint study is to review and build upon previous joint study results that were adopted by the Southwest Utah Technical Task Force. The previous study reports are referenced throughout this report as the "2007/2009 Reports".

The primary findings included in the 2007/2009 Reports were the proposal to introduce an alternate 345 kV transmission route to the region with a new 345 kV point of delivery to serve forecasted load growth occurring in eastern Washington County, improve reliability through new transmission sources, and reduce overall expansion costs by optimizing 138 kV transmission line requirements in the region. As proposed previously, a likely 345 kV transmission line corridor would follow Interstate-15 between Cedar City and St. George, Utah.

As mentioned, the focus of this study is to collaboratively plan the transmission infrastructure in the area such that it reliably meets projected load growth while reducing costs by avoiding duplication of facilities. It has been determined in previous studies as well as confirmed in this study that a joint looped 138 kV system is the best technical solution to accomplish these objectives. Because of this, other alternative non-looped solutions were not considered and are not included in this report. For a cost comparison analysis of a joint looped 138 kV system build-out versus individual utility expansion see the 2007 Report.

A reliability concern was described in the 2007/2009 Reports with all the major transmission feeding into the area being located in a common corridor between Red Butte/Central and St. George. While this is still a concern for the area and an alternate 345 kV transmission route is recommended in each of the joint studies, recent transmission re-construction of the Red Butte-St. George 138 kV line to double circuit 345 kV steel construction is expected to improve this situation. Because forest fires have been the primary cause of historical outages along this corridor, reliability should improve by having all poles now constructed with steel through the area, wider 345 kV conductor spacing for smoke ionization, and continued focus on implementing a thorough vegetation management.

## 3.0 Study Criteria

Studies were performed using applicable standards from the Western Electric Coordinating Council (WECC), National Electrical Reliability Corporation (NERC), and the Southwest Utah Technical Task Force.

Specific standards that were used in the joint studies include:

- Steady-state or pre-disturbance transmission voltages (typically 69 kV and above) should be in the range of 0.95 to 1.05 p.u.
- All equipment loading must be below normal ratings under normal system conditions
- Changes in transmission bus voltages from pre- to post-contingency conditions should be less than 3% for single (N-1) contingencies (with a 5% maximum), and 10% for applicable double (N-2) contingencies, with exceptions noted in regards to the utilities involved.
- For N-1 and applicable N-2 contingencies, all loading on lines, series capacitors, and transformers must be maintained below the normal rating or emergency rating where provided
- Single contingencies that result in a loss of load greater than or equal to 50MW will be flagged and assessed individually to determine the magnitude of initial load lost and whether or not the entire load can be restored through alternate sources. Where the magnitude of initial load lost is greater 100 MW or alternate sources are not able to restore all the load, additional looped transmission will be proposed
- Minimum load power factor should be 0.98 consisting of loads modeled at 0.92 and compensated (equivalent distribution shunt capacitors) to 0.98
- Voltage deviation for shunt capacitor bank switching should not exceed 3%.

Additional PacifiCorp criteria incorporated in the study:

- The St. George Static VAr Compensator (SVC) has a continuous rating of -35 to +100 MVAR but is normally operated with a steady-state range of -15/+20 MVAr. Within the steady-state range, the SVC will maintain the St. George 138 kV substation voltage between 1.0 and 1.03 p.u. (typically 1.0 p.u. during heavy load conditions and 1.03 p.u. during light load conditions) by switching reactive devices at Red Butte and St. George to minimize the SVC output and maintain desired voltages at Red Butte and St. George substations. <u>The SVC continuous rating outside of the steady-state range is reserved for outage conditions.</u>
- The Red Butte SVC is expected to be placed in service prior to the 2011 summer operating season. The anticipated operating range under normal conditions is -35/+100 MVAr with a continuous rating only available for outage conditions of up to -75/+350 MVAr. It is anticipated that the SVC and other available shunt capacitors will be used to maintain an approximate 1.04 p.u. voltage on the Red Butte 345 kV bus.

## 4.0 Historical Loads

As shown in Figure 1 below, the Southwest Utah area peak load (loads typically served from the Red Butte/Central substations) has remained flat for the last several years. The all-time peak continues to be the 2007 peak which was 20 MW higher than in recent years. The reduced peak load in 2008-2010 is estimated to be due to both weather and continued economic slowdown.

**Figure 1 – 5 Year Historical Loading**

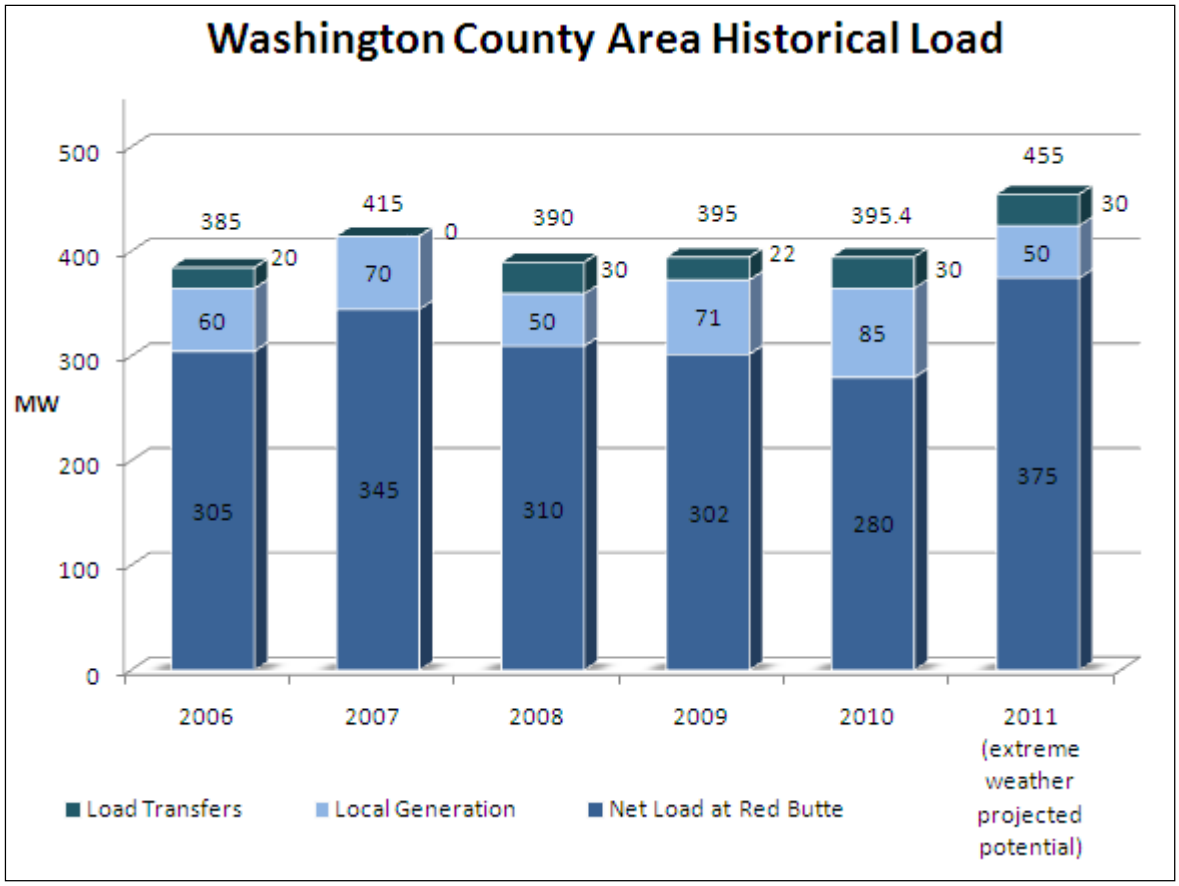


Figure 2 below provides an indication of the particularly high load growth that took place in the area prior to 2008. The peaks indicated in the Figure prior to 2006 are approximate because output from some locally operated generation facilities and load transfer amounts were not recorded or available.

**Figure 2 – 10 Year Historical Loading**

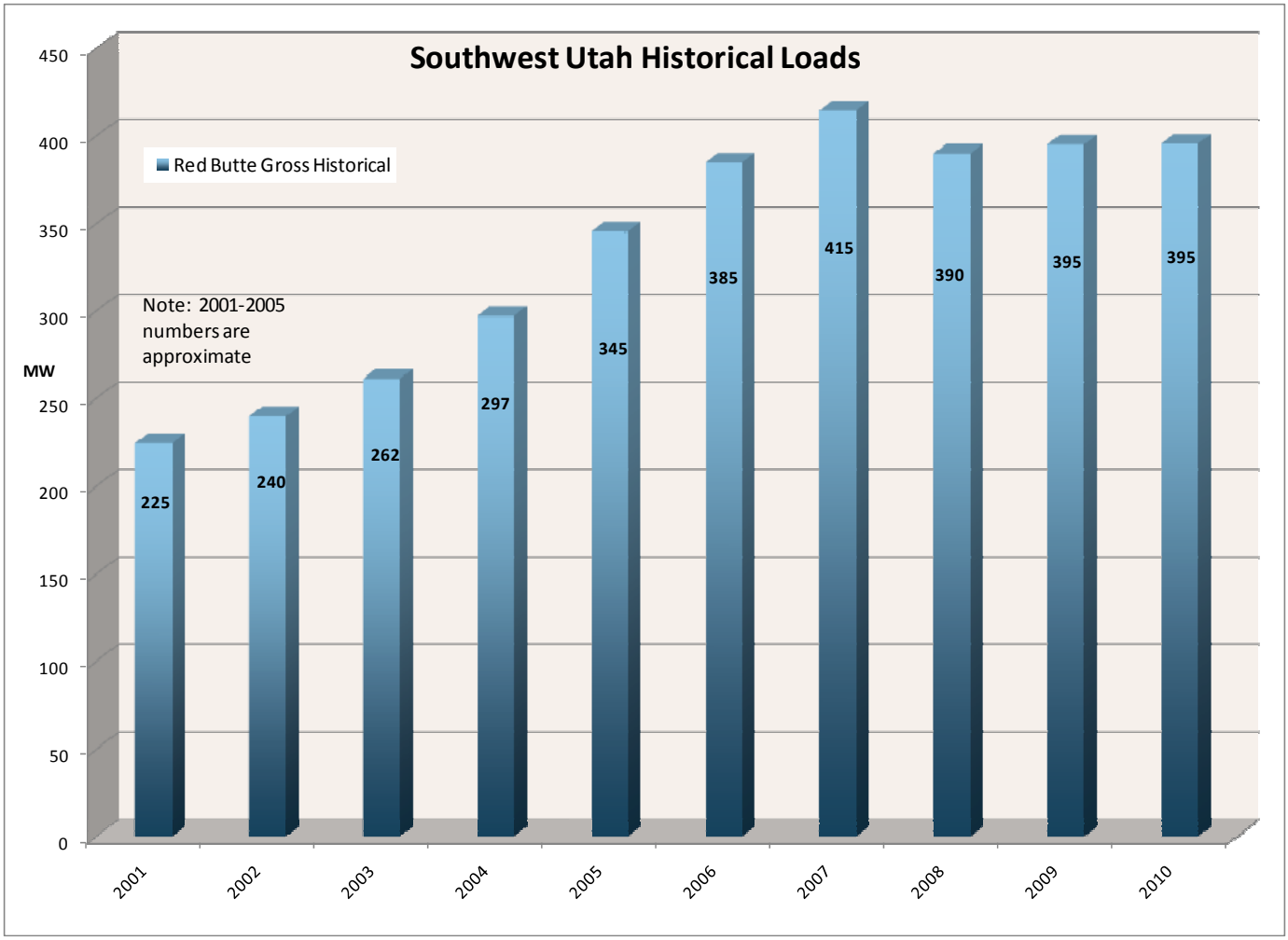

## 5.0 Load Projections

Load projections by year and by bus for the next 10 years were received from each of the utilities for all loads typically served from the Red Butte/Central substations. A 15-year projection was also received for long range planning purposes with interpolated values from 2021-2024. The combination of all loads used in the studies is depicted in Figure 3 below.

**Figure 3 – Load Projections**

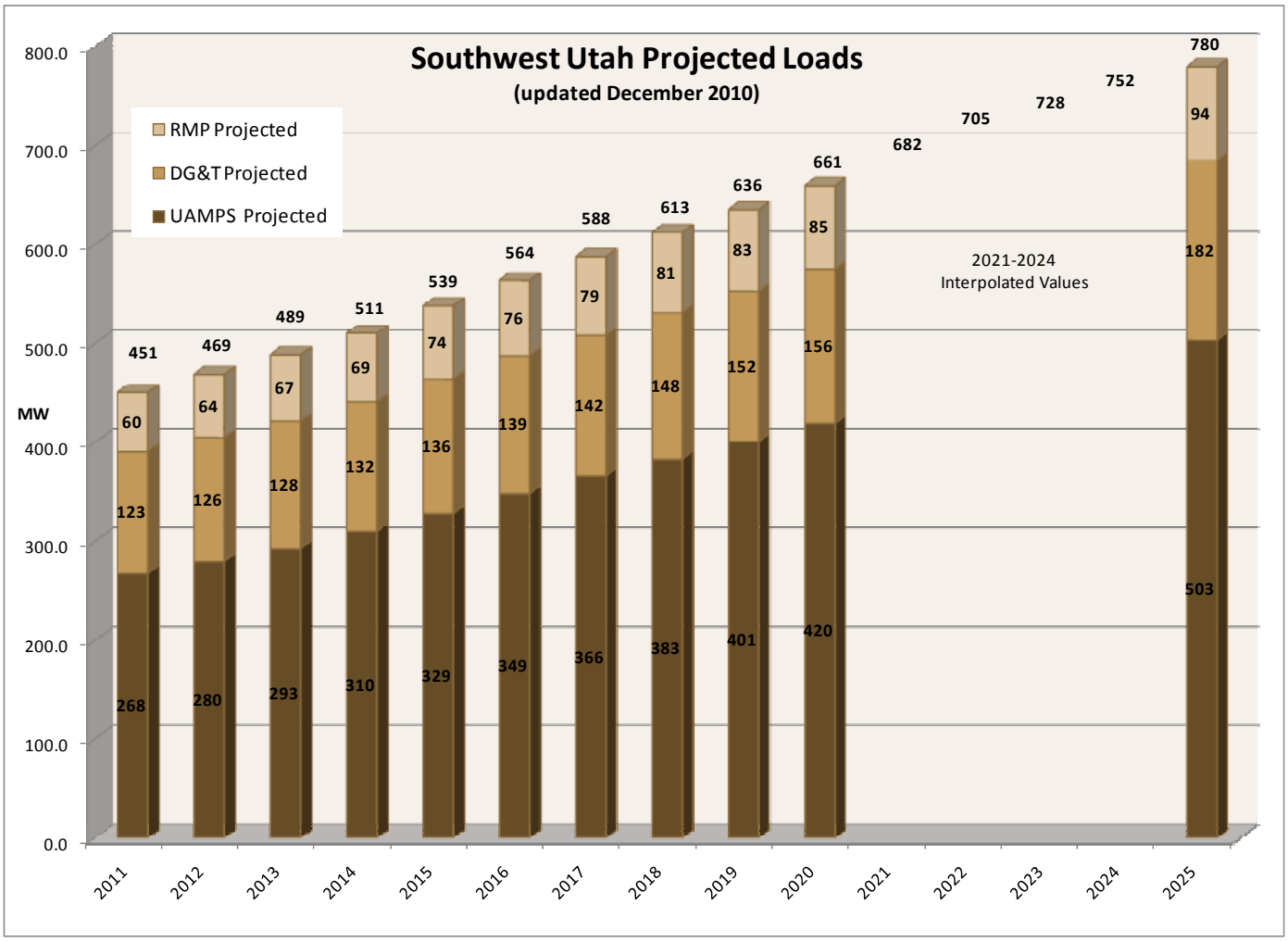

The combined projected growth rates (percent growth per year) from each of the utilities as well as actual growth rates from the last 10 years are shown in Figure 4. As indicated, the total load for the area experienced dramatic increases through 2007 which subsequently dropped off in 2008. Peak loading for the area has remained flat for the last several years which is attributed to both economic factors and non-extreme weather patterns (see 2010 Southwest Utah Post Peak Report).

The 2007/2009 Reports included load growth projections reflective of the higher growth patterns experienced prior to 2008. The projections applied in this study shown below average about 4% per year. For reference, the projected peak load for 2024 that was used in the 2009 Report was 1032 MW compared with recent projections of 752 MW shown in Figure 3.

A permanent transfer of the Littlefield, Arizona area load to the Red Butte system is anticipated prior to the 2011 summer season which is a primary cause for the higher growth rate shown below for 2011.

**Figure 4 – Projected Growth Rates**

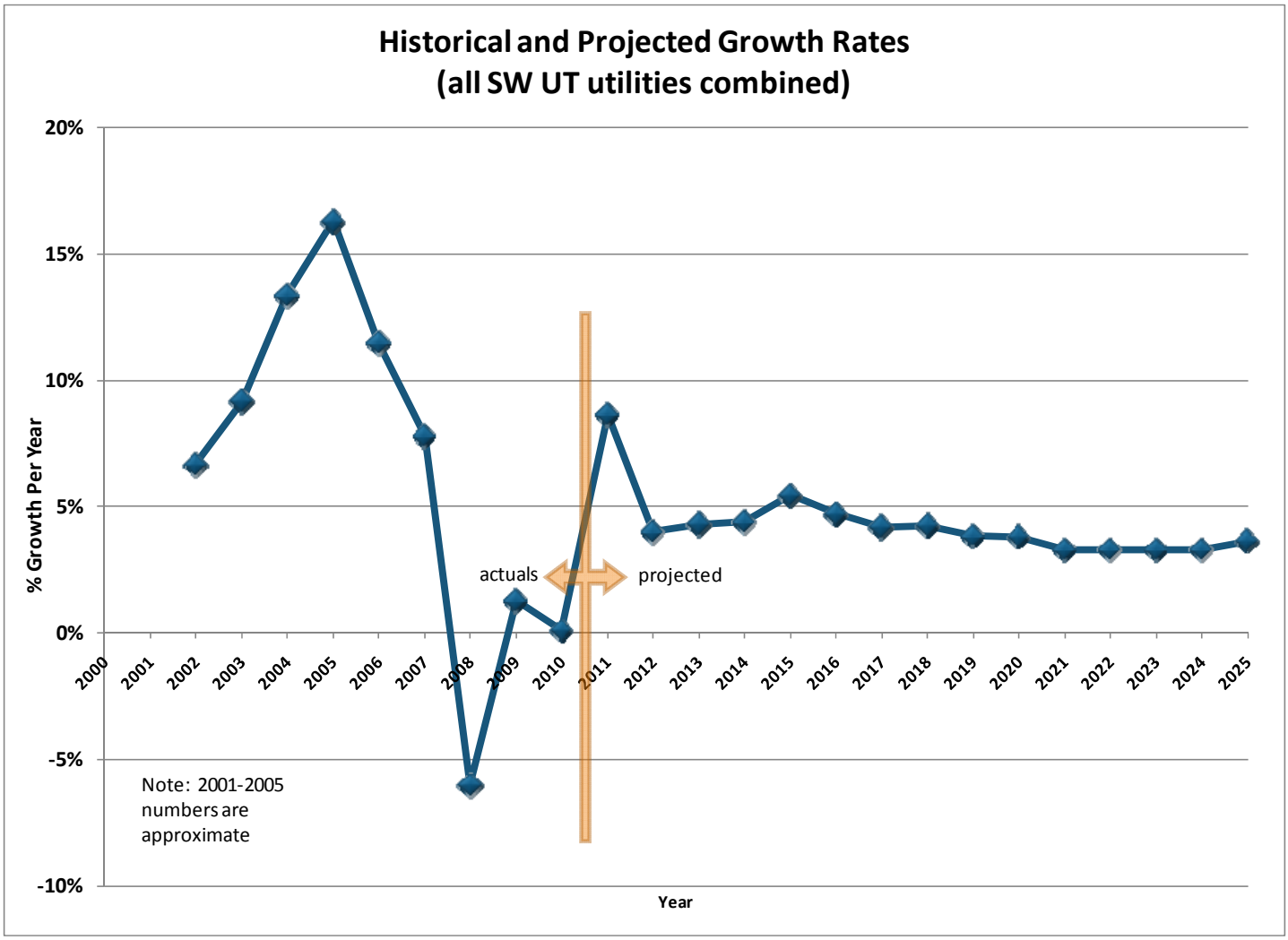

## 6.0 Recent Transmission System Improvements

A significant number of transmission projects in the area were implemented recently or are scheduled to be placed in service prior to the upcoming summer season. These improvements were included in the study and are outlined as follows:

- ⇨ Shunt Capacitor Banks – over the last several years a number of capacitors were installed at several locations that combined total nearly 200 Megavolt-Amperes Reactive (MVAr) with more planned to be installed at Red Butte in 2011

- ⇨ Transmission Rebuild – the Red Butte-St. George 138 kV line was rebuilt to all steel double circuit 345 kV construction operated at 138 kV

- ⇨ Series Capacitor Bank – during 2010, a 345 kV single segment 35 ohm series capacitor was installed on the Sigurd-Red Butte 345 kV line

- ⇨ Line Transpositions – during 2010, three line transpositions were installed on the Sigurd-Red Butte 345 kV line

- ⇨ Static VAr Compensator (SVC) – during the spring of 2011, a new +350/-75 SVC will be installed at Red Butte substation

- ⇨ Transformer Capacity Increase – NVEnergy is constructing a project to increase the 230/345 kV transformer capacity at the Harry Allen substation (NVEnergy), and it is anticipated to be completed during 2011. This will increase the load serving capability at Red Butte during outage conditions while being fed solely from Harry Allen to approximately 575 MW.

## 7.0 Study Results

Detailed study results are included in Appendix D which contains information that was used to formulate the proposed construction schedule as well as additional results that were not within the scope of this study but were added for reference only. This would include information such as projected distribution transformer overloads and other lower voltage issues.

As expected, most of the projects that were proposed in the previous reports are included in the schedule but were delayed several years due to the reduced load projections. However, a number of new items are highlighted in red in the schedule below with additional explanations in the following sections.

As noted in previous studies the concern exists as to continued reliance on a common transmission corridor between Red Butte/Central and St. George substations. The proposed construction schedule continues to specify serving the entire load (from 450 MW up to 800 MW) for Washington County across this common corridor from Red Butte/Central to St. George Substation until the Three Peaks to Hurricane West line is constructed. The corridor is susceptible to the possibility of range fires, a 345 kV structure failure or other event that could potentially trip multiple lines where all or a significant portion of the Washington County load would remain out of service until the line(s) in this corridor are restored.

The proposed schedule identifies the operation of the 138 kV transmission in the area in a looped manner to meet the objective of improving service while reducing possible duplication of facilities. The proposed plan addresses the technical feasibility of looping and expanding the system, however, operational and business/commercial issues will need to be addressed before the plan can be implemented.

Study results that reference switching requirements, line sections, or tap points etc. outlined below can be referenced to the one-line system load flow diagram included in Appendix B. The results shown assume all local generation in the area is off-line.

### 7.1 Proposed Construction Schedule

Items highlighted in red indicate items that are new or have changed in scope compared to the previous 2009 Report.

| 2011 Study - Proposed Construction Schedule | |
|---|---|
| 450 MW system total load or (2011) | • Fields-Mill Creek 138 kilovolt tie operated closed<br>• Middleton-Gateway 69 kV line rebuilt 2 miles to 138 kV (continue to operate at 69 kV) to remove 4/0<br>• SVC at Red Butte (per PacifiCorp Main-Grid requirements/studies, currently on-schedule)<br>• Complete Fields-Majestic-Ft. Pierce 138 kV loop |
| 510 MW (2014) | • Gateway-Hurricane West rebuild 2 miles to double circuit 138 kV construction and energize 138 kV from Middleton to Hurricane W.<br>• Install new Hurricane West substation with 2 x 138/69 kV transformers (design for future 138 kV and 345 kV expansion) |
| 540 MW (2015) | • Energize 4th circuit between Red Butte and St. George at 345 kV<br>• Expand St. George substation with a 345/138 kV 700 MVA transformer |
| 566 MW (2016) | • Install Majestic-Hurricane West 138 kV line |
| 588 MW (2017) | • Re-Conductor St.George-Fields with high temperature 1020 ACCC |
| 638MW (2019) | • Install Green Valley-Ft. Pierce 138 kV line |
| 682MW (~2021) | • Energize 2nd 345 kV circuit between RedButte-St. George and install 2nd 345/138 kV 700 MVA transformer at St. George |
| 705MW (~2022) | • Re-Conductor St.George-Skyline #1 and #2 with high temperature 1020 ACCC |
| 728MW (~2023) | • Construct new St. George-Hurricane West line, operate at 138 kV (345 kV constructed) |
| 800MW (~2025) | • Construct Three Peaks-Hurricane West 345 kV line to coincide with PacifiCorp Transmission requirements and install 345/138 kV transformer at Hurricane West |

## 7.2 2011 Study Results

Study results indicated that it was not possible to restore the entire load with 2011 projections for a loss of either the St. George-River 138 kV line or the St. George-Fields 138 kV line. Either outage also results in an initial load loss of 118 MW and 100 MW respectively. Because of this it is recommended that the Fields-Mill Creek 138 kV tie be operated normally closed creating a 138 kV looped system. Most of the required physical facilities are already in place to accommodate this but operational and business/commercial issues will need to be addressed before it can take place.

A two mile stretch of 4/0 ACSR conductor exists in the Middleton-Gateway 69 kV line that must be rebuilt to 138 kV in preparation for future 138 kV operation and to meet 69 kV operational requirements.

The Red Butte SVC is planned to go in service during the spring of 2011 and is presently on schedule

An outage of the Fields-Ft. Pierce 138 kV line results in an initial loss of 100 MW and approximately 2/3 of the load can be restored through alternate sources. Because of this, it is recommended that the Fields-Majestic-Ft. Pierce 138 kV proposed line be completed as soon as possible. Installation of the Hurricane West 138/69 kV project with the Brentwood 69 kV tap line terminated at the new substation significantly improves the backup capability for this outage such that all but about 15 MW can be restored.

**Figure 5 – 2011 Re-Build Portion of Middleton to Gateway**

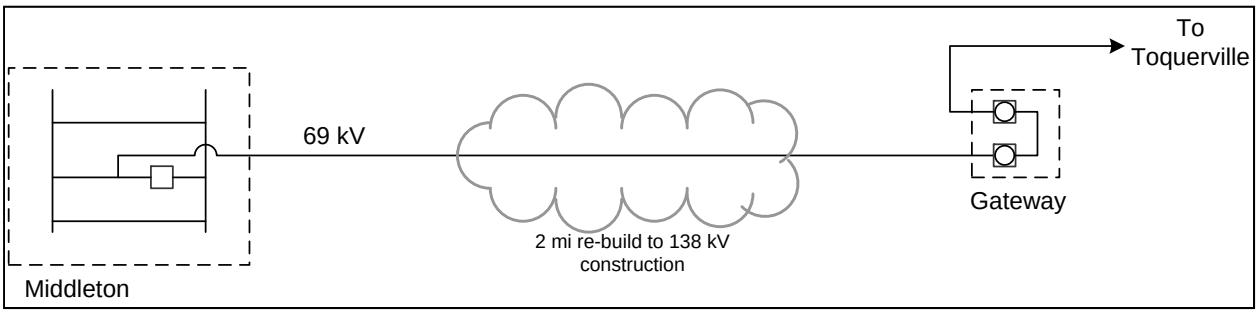

**Figure 6 – 2011 Millcreek to Fields and Fields to Ft. Pierce 138 kV Ties**

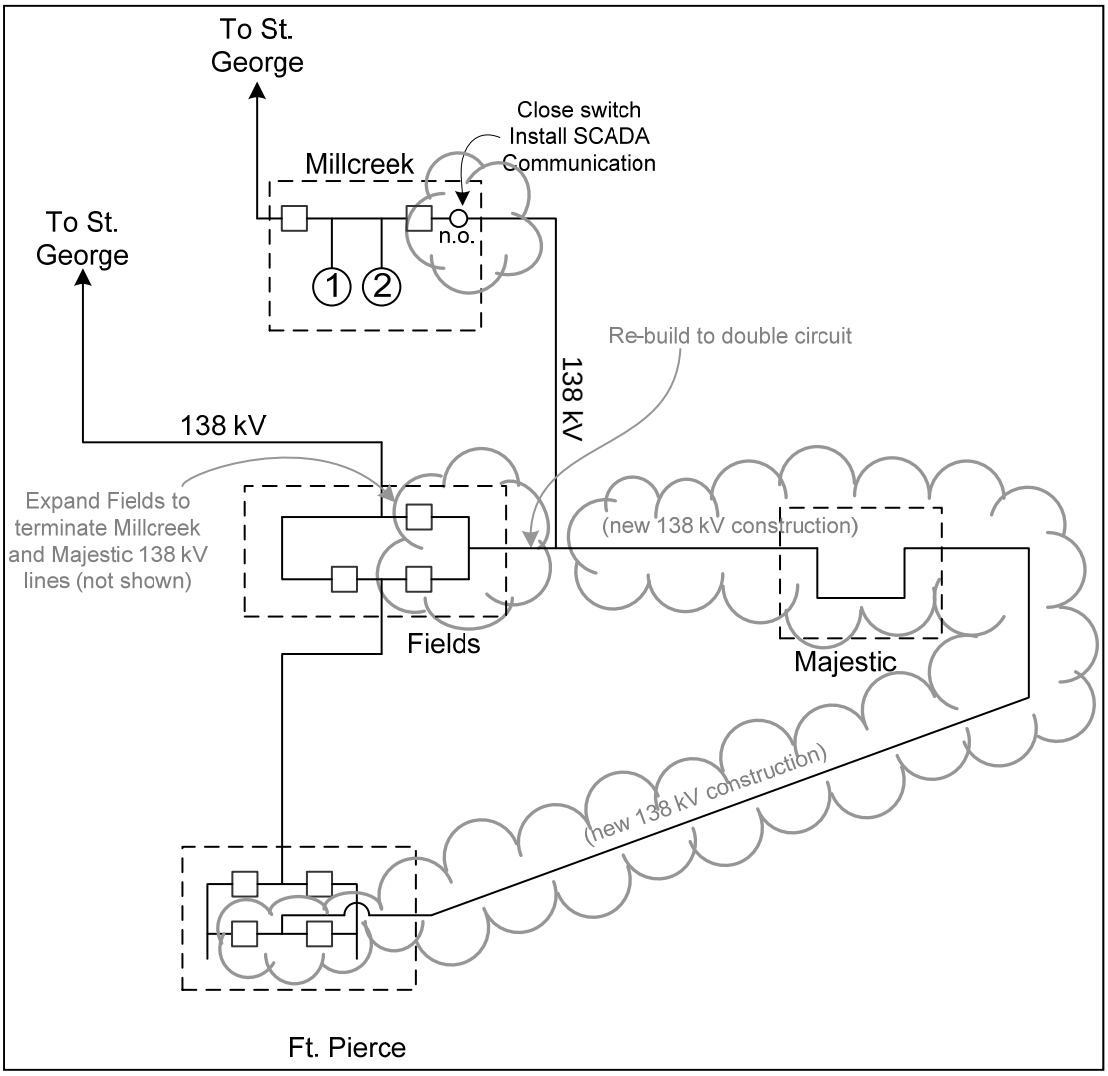


## 7.3 2014 Study Results

A number of outages scenarios led to the proposed in-service date of the Hurricane 138/69 kV substation and conversion of the Middleton-Gateway-Hurricane West 69 kV line to 138 kV. Some of the more significant scenarios include a River-Mill Creek 69 kV outage, a River 138/69 kV transformer outage, the above mentioned Fields-Ft. Pierce outage, and a Skyline-Green Valley 138 kV line outage (same as a Green Valley transformer outage). Each of these scenarios are highlighted below with additional detail and switching requirements.

As noted in the construction schedule, there are two separate two mile line segments that require rebuilding prior to 138 kV operation for the Middleton-Hurricane West line. In addition to rebuilding these portions, a new Hurricane West substation will be required and a re-termination of the Middleton-Gateway line into a 138 kV bay in St. George substation is required. Two 138/69 kV transformers are proposed to be installed initially due to the lack of mobile transformer backup availability. Also, because a backup feed is

removed from Gateway and Quailcreek (RMP) substations in order to convert the line to 138 kV, an emergency backup tie is proposed between RMP and Hurricane City on the line to Anticline substation.

| River-Millcreek 69 kV Outage | |
|---|---|
| SWITCHING REQUIRED TO RESTORE LOADS | |
| Close Red Cliff Wash-Wash TP | |
| Switch Toquerville to Coleman | |
| Switch CW (only) to Windy Ridge | |
| Open CW - Brentwood | |
| Open SienaTP-WashTP3 | |
| | |
| PROJECTED ISSUES/CORRECTIONS | |
| 2011 | Twin Cities voltage to 0.96 |
| | River-HS TP at 97% of 80 MVA |
| 2012 | Twin Cities voltage to 0.95 |
| | Middleton-Gateway 100% (will not be an issue with rebuild scheduled for Spring 2012) |
| | River-HS TP at 103% of 80 MVA |
| | Last year this will work - Convert Middleton-Hurricane to 138 kV (84 MW lost initially) |

| River 138/69 kV Transformer Outage (assuming only 1 TRF there) | |
|---|---|
| SWITCHING REQUIRED TO RESTORE LOAD | |
| Open MillCreek-MillCreek TP | |
| Close RDCL WSH-WASH TP | |
| Close TwinLake-PanJct | |
| Open PanJct-Panorama TP | |
| Switch EastRidge to Green Valley | |
| Switch FloodSt to Green Valley | |
| | |
| PROJECTED ISSUES/CORRECTIONS | |
| 2011 | Significant load loss potential (112 MW) |
| 2013 | River TRF to 99% of 75 MVA |
| | Skyline-TL Tp 95% of 80 MVA |
| | Last year this will work - Add HurricaneW 138/69 |

| Fields-Ft.Pierce Outage | |
|---|---|
| SWITCHING REQUIRED TO RESTORE LOAD | |
| Switch Toquerville to Coleman | |
| Close in Brentwood Tap | |
| Open Wash Fields-Fields | |
| Close in Bloomington-Green Vly | |
| | |
| PROJECTED ISSUES/CORRECTIONS | |
| 2011 | Significant initial load loss potential (98 MW) |
| | ~30 MW cannot be restored |
| | Recommend Hurricane West 138/69 kV as soon as possible |
| 2012 | ~15 MW cannot be restored |
| | Recommend Fields-Majestic-Ft.Pierce 138 kV loop |
| | (majestic transformer helps significantly but doesn't restore all load) |

| Skyline-Green Valley or 138/69 Outage | |
|---|---|
| SWITCHING REQUIRED TO RESTORE LOAD | |
| Close EastRidge-SouthGate | |
| Open GrnVly-GrnVly Tp | |
| Close SnowCyn-SS Tp | |
| River TRF's load to 97% | |
| | |
| PROJECTED ISSUES/CORRECTIONS | |
| 2012 | Shift Panorama to Skyline |
| | 2015 is last year this will work |
| | Recommend Hurricane West 138/69 |
| 2015 | Rebuild DIXCL Tp-TL Tp |
| | Balance load between Hurricane W, River and Skyline |
| | Shift SC2 to RMP line |
| 2018 | last year this will work |
| | Recommend GreenVly-Ft Pierce 138 kV |

**Figure 7 – 2014 Expand 138 kV to Hurricane West**

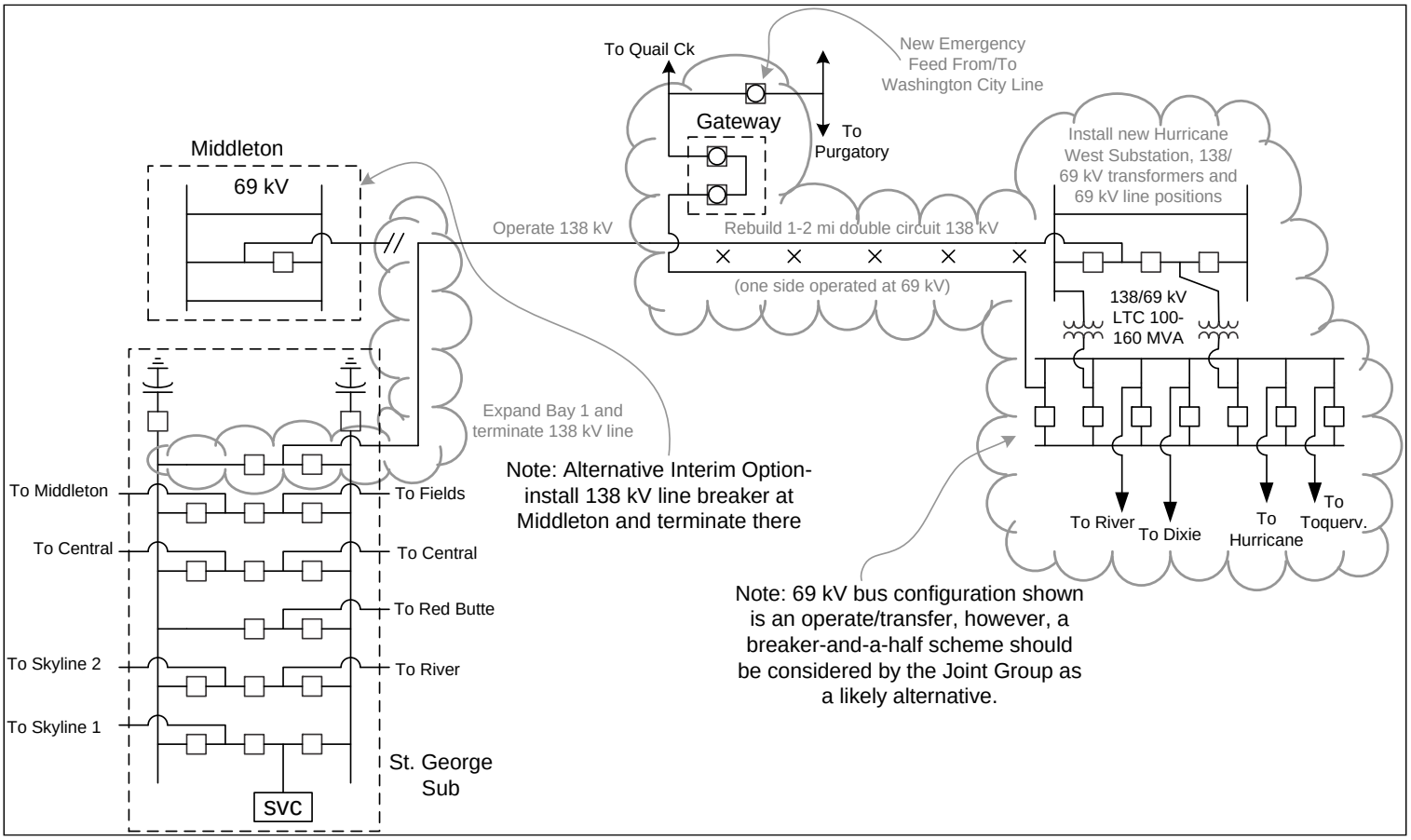


## 7.4 2015 Study Results

The proposed construction for 2015 is caused by two N-1 scenarios. The first is a loss of the recently constructed Central-St. George 138 kV (345 kV constructed) line which results in each remaining UAMPS 138 kV circuit to load to 104% of the 240 MVA SPOL ratings in 2015. The second is a loss of the Red Butte 345/138 kV transformer that results in each remaining Central 345/138 kV transformer to load to 98% of the 280 MVA rating.

It was anticipated previously that both of these issues would be addressed by energizing the fourth 138 kV circuit between St. George and Red Butte/Central and replacing one of the Central 345/138 kV transformers with a larger unit. However, study results for each of the years following 2015 indicated that these corrections would only last until 2018 before a loss of either the newly replaced transformer or the existing Red Butte transformer would result in an overload condition on the remaining larger transformer. This is due to an impedance mismatch between the transformers.

Considering that both circuits of the recently reconstructed line would need to be energized at 345 kV in the 2020-2023 timeframe and the impedance mismatch issue, a 345 kV solution was investigated and proved to be the preferred alternative. This alternative energizes the 4$^{th}$ circuit between Red Butte/Central and St. George at 345 kV

with an expansion of the St. George substation to accommodate a new 700 MVA 345/138 kV transformer. Analysis indicates this will last until 2021 before requiring additional modifications to these facilities (see 2021 section below) and provides system modification that matches up better with the longer term plans for this area.

The two options were estimated and an approximate 30% higher upfront cost would be required over the previously identified 138 kV option; however, it can be demonstrated that a much larger savings is gained by avoiding the interim investment in expansion of 138 kV facilities that would no longer be needed once the system is required to go to 345 kV.

**Figure 8 – 2015 One-Line Expansion to 345 kV**

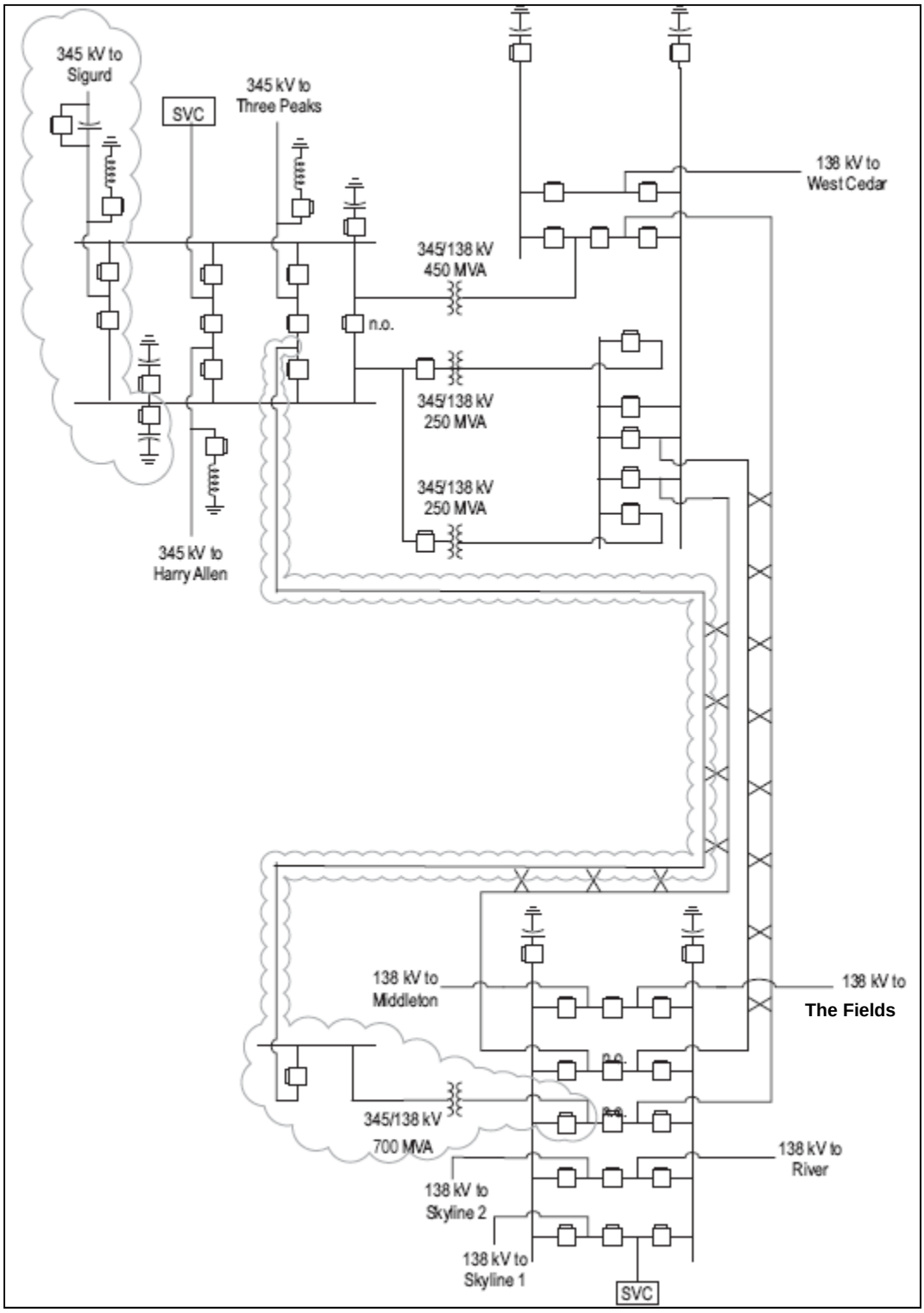

### 7.5 2016 Study Results

A loss of the 138 kV St. George-Hurricane West line in the 2016 timeframe results in an initial load loss of approximately 90 MW and the underlying 69 kV system can no longer restore all the load. It is recommended that the Majestic-Hurricane West 138 kV circuit be constructed and energized to address this scenario.

| | |
|---|---|
| Middleton-Hurricane 138 kV (no Tie to Majestic) | |
| or Hurricane 138/69 Outage (assuming only 1 TRF there) | |
| SWITCHING REQUIRED TO RESTORE LOAD | |
| Close in MillCreek-Purgatory | |
| Close SienaTP-CoralTP | |
| Open AntiTP-Purgatory | |
| Close Red Cliff Wash-Wash TP | |
| Open MillCreek-MillCreekTP | |
| Switch HD 138 to CW 69kV | |
| Switch Toquerville to Coleman | |
| | |
| PROJECTED ISSUES/CORRECTIONS | |
| 2013 | River TRF's to 99% of 75 MVA |
| 2014 | Additional Switching Required to put load on Skyline and Green Valley |
| | 40 MVA mobile 138/69 available also |
| 2015 | SGERFS-FSTP 99% of 28 MVA |
| | Skyline-TwinLK 95% of 80MVA |
| | Last year this will work - Add Majestic-Hurricane 138 kV (~85 MW lost initially-depending on n.o. points) |
| | Add Second TRF (installed previously) |

**Figure 9 – Majestic to Hurricane West 138 kV**

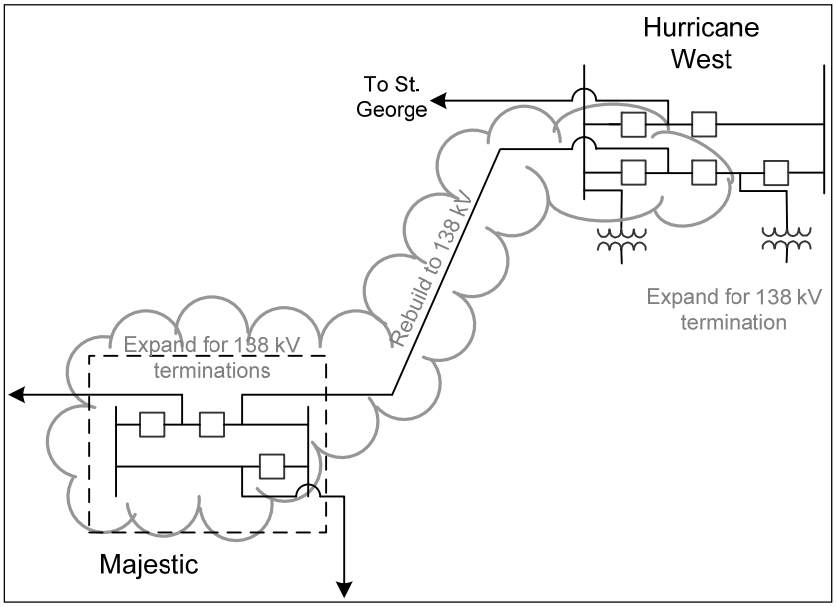

## 7.6 2017 Study Results

A loss of the St. George-River 138 kV line in the 2017 timeframe causes the St. George-Fields 138 kV line to load to 100% of the 200 MVA SPOL rating. It was anticipated previously that this would be addressed by adding another 138 kV circuit to the Hurricane West substation; however, this only delays the concern for 2-3 years. The recommended solution that addresses the concern for a longer period of time with a relatively lower cost is to replace the existing 795 ACSR conductor with 1020 ACCC which typically can be done without requiring that the poles be changed out.

**Figure 10 – 2017 Re-Conductor St. George to Fields**

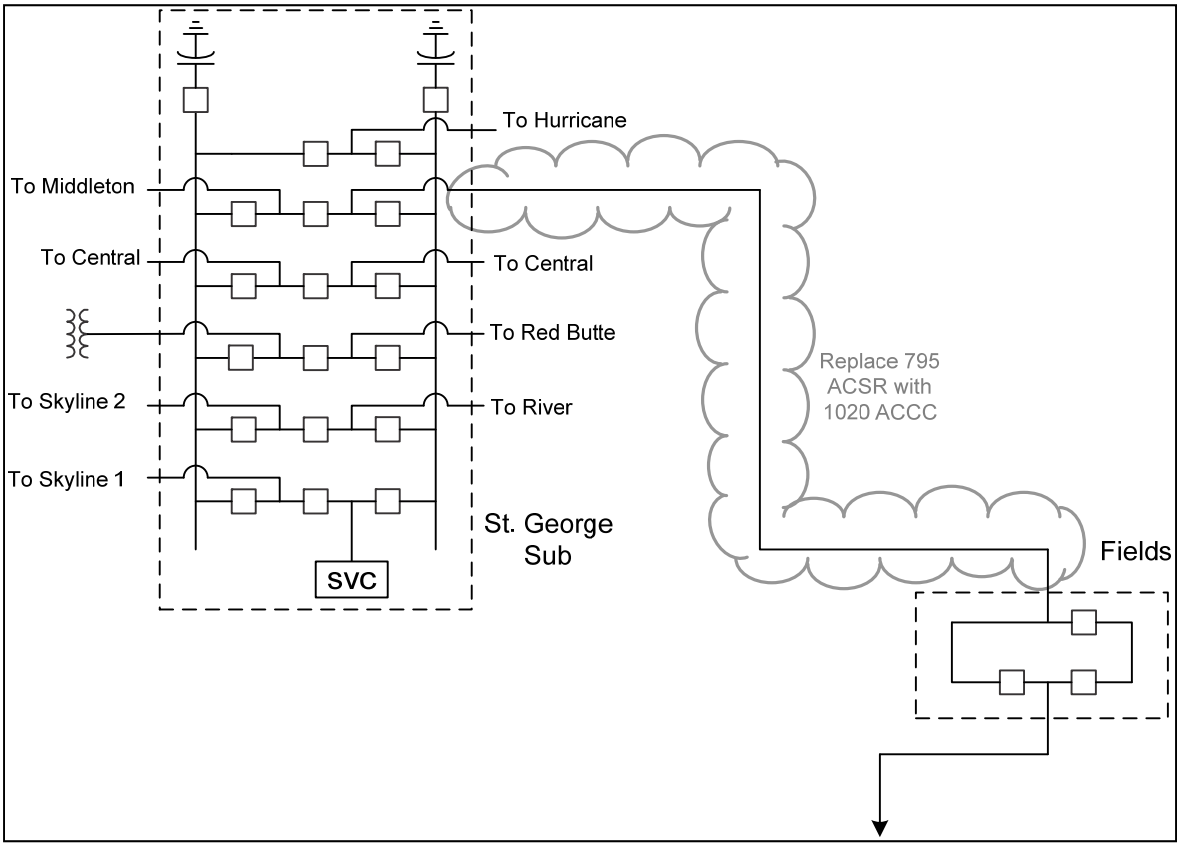


## 7.7 2019 Study Results

The Skyline-Green Valley 138 kV outage scenario was addressed in Section 7.3 with the addition of a 138/69 kV Hurricane West substation. However, by 2019 all of the load cannot be restored through other sources and a Green Valley-Ft. Pierce 138 kV line is needed.

| | |
|---|---|
| Skyline-Green Valley or 138/69 Outage | |
| SWITCHING REQUIRED TO RESTORE LOAD | |
| Close EastRidge-SouthGate | |
| Open GrnVly-GrnVly Tp | |
| Close SnowCyn-SS Tp | |
| River TRF's load to 97% | |
| | |
| PROJECTED ISSUES/CORRECTIONS | |
| 2012 | Shift Panorama to Skyline |
| | 2015 is last year this will work |
| | Recommend Hurricane West 138/69 |
| 2015 | Rebuild DIXCL Tp-TL Tp |
| | Balance load between Hurricane W, River and Skyline |
| | Shift SC2 to RMP line |
| 2018 | last year this will work |
| | Recommend GreenVly-Ft Pierce 138 kV |

**Figure 11 – Ft. Pierce to Green Valley 138 kV**

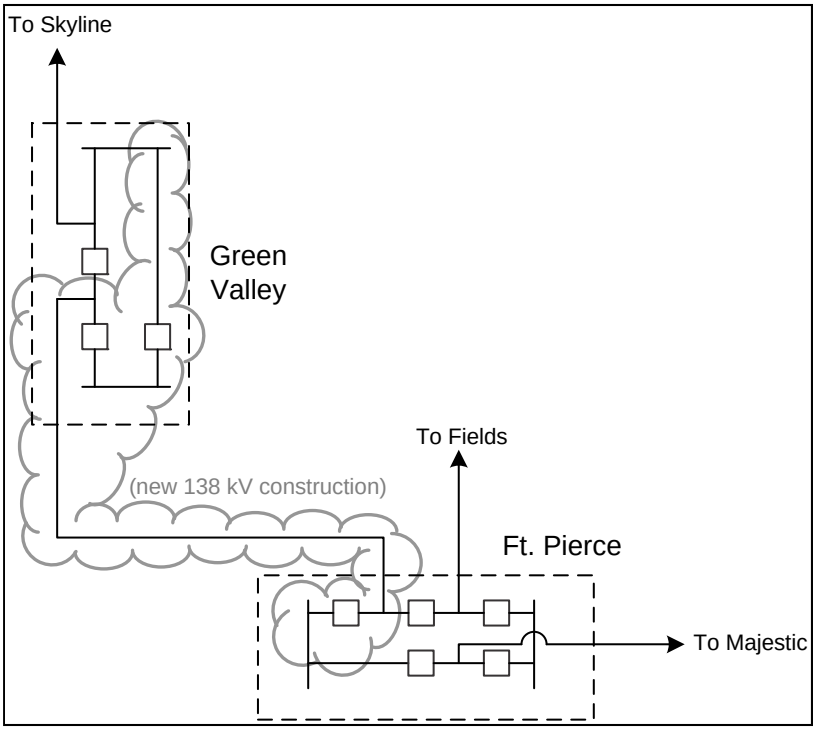


## 7.8 2021 Study Results

A loss of the Red Butte-St. George 345 kV line or the St. George 345/138 kV transformer in approximately the 2021 timeframe results in an overload on the 138 kV Red Butte/Central-St. George lines. This is mitigated by energizing the 2nd 345 kV circuit between Red Butte and St. George and adding a second 345/138 kV 700 MVA transformer at the St. George substation.

**Figure 12 – 2021 2nd 345 kV Red Butte to St. George**

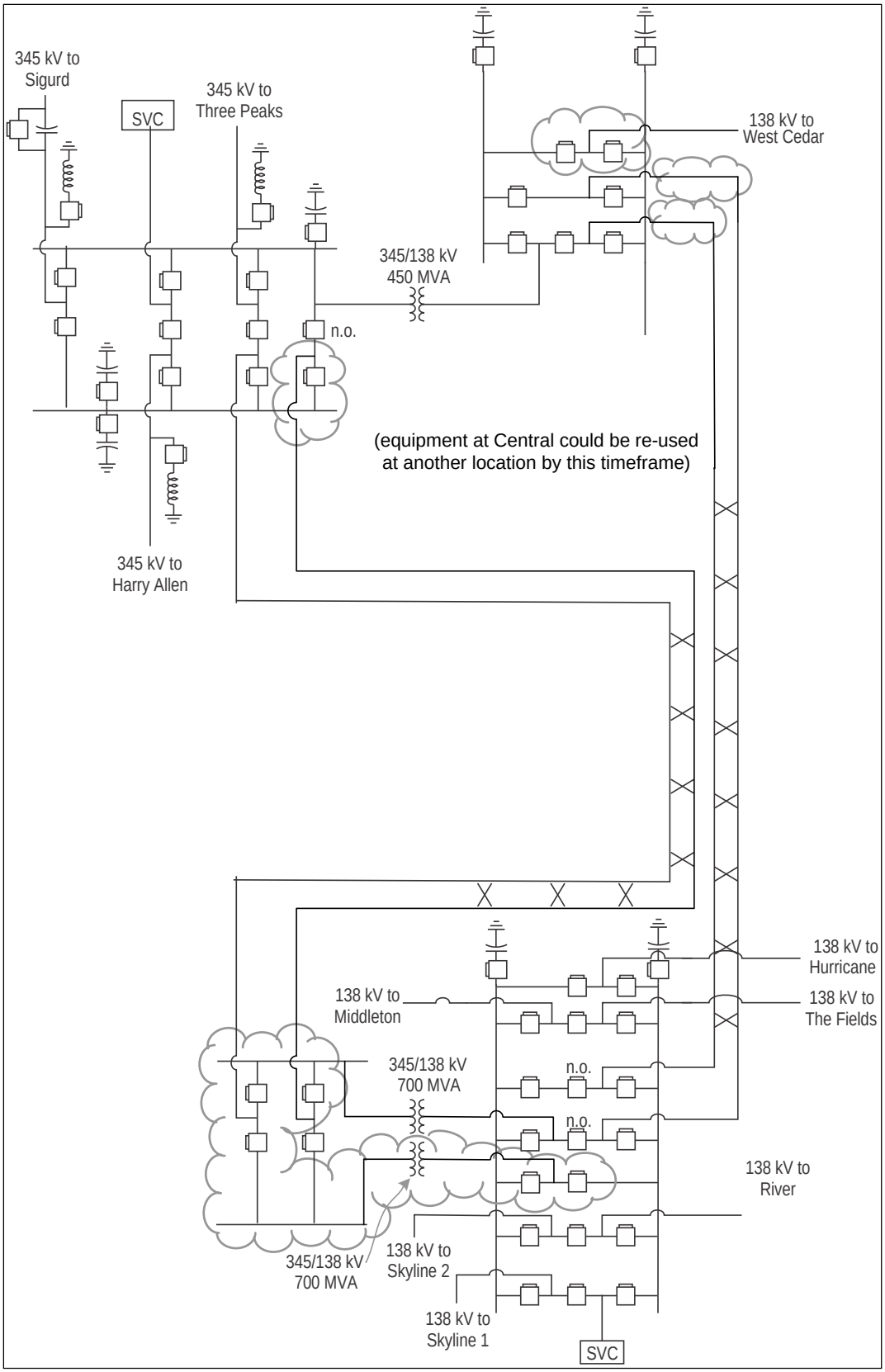

### 7.9 2022 Study Results

By approximately 2022, a loss of either of the St. George-Skyline 138 kV lines results in the loading on the remaining line to exceed the 240 MVA SPOL rating. This can be addressed by replacing both circuits with 1020 ACCC conductors similar to the recommendation for the St. George-Fields 138 kV line.

**Figure 13 – St. George to Skyline Conductor Replacement**

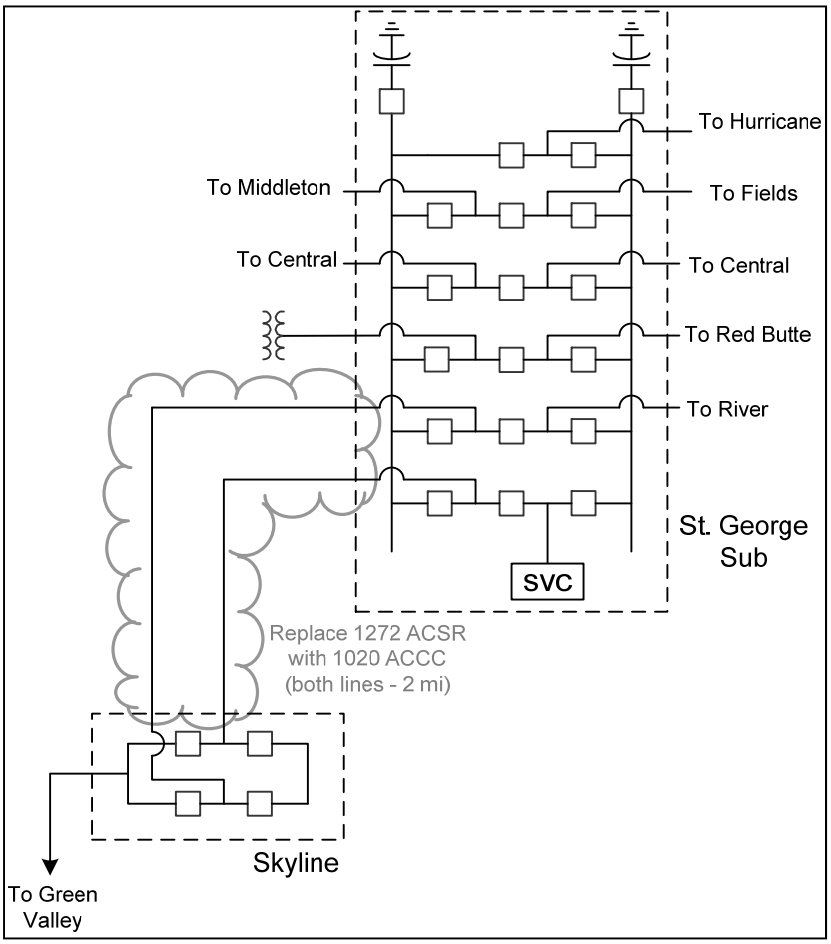


### 7.10 2023 Study Results

By approximately 2023, an outage of the St. George-Fields 138 kV line or the St. George-Hurricane West 138 kV line results in overload conditions above the SPOL ratings on adjacent 138 kV lines. It is recommended that a new 345 kV constructed, 138 kV operated line be installed between St. George and Hurricane West to address this issue and to work towards a future 345 kV alternate source to the area.

As noted in previous study reports, the majority of this proposed line segment will pass through the Red Cliffs Desert Reserve area. Recent legislation created a National

Conservation Area (NCA) out of the Reserve area. The management plan is under development. Because of this, it is imperative that all of the utilities provide input and comments during the management plan development process in order to preserve the ability to construct the line between St. George, Hurricane West, and Three Peaks substations.

### 7.11 2025 Study Results

Depending on PacifiCorp Transmission studies, it is anticipated that another transmission line will be needed in this timeframe between Sigurd and Washington County anticipated along the Interstate 15 corridor addressing issues that were described in the 2007/2009 Reports. Due to the expected increase in difficulty over time of obtaining this new right-of-way, the process to secure it should start now.

**Figure 14 – 2025 St. George – Hurricane – Three Peaks**

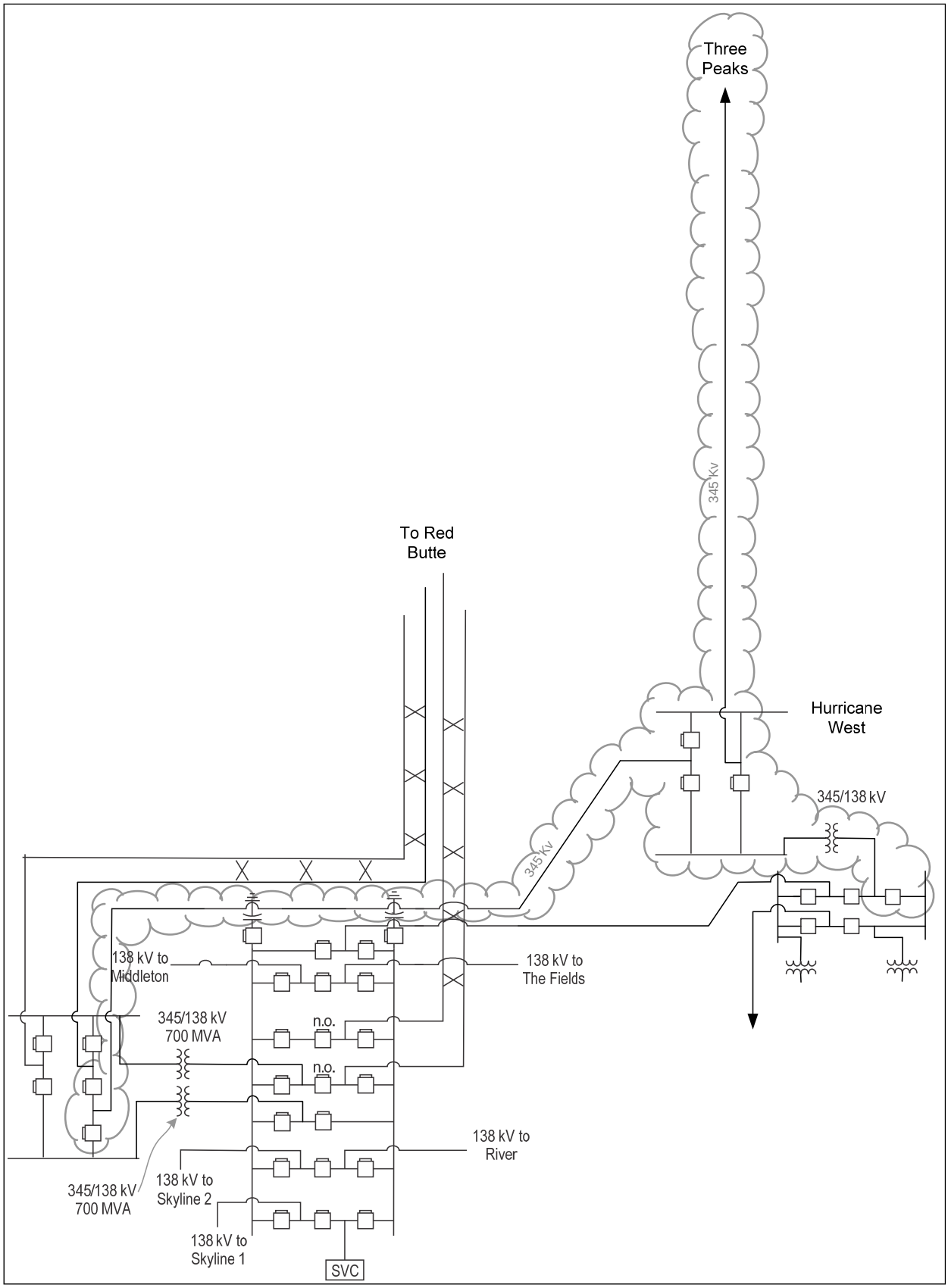

## 8.0 Conclusions

The proposed plan accomplishes the goal for cooperatively planning the transmission for this unique area to reliably serve customers and avoid duplication of facilities. Avoiding duplication of facilities is estimated to reduce the overall per Utility build-out cost while improving the level of service. The plan requires the coordination and cooperation of the various utilities within the area. It is recommended that the alternate 345 kV transmission corridor between Cedar City (Three Peaks substation) and Washington County (Hurricane West and St. George substations) be pursued presently to avoid increased opposition as time goes on.

# Appendix A
## Area Transmission Map

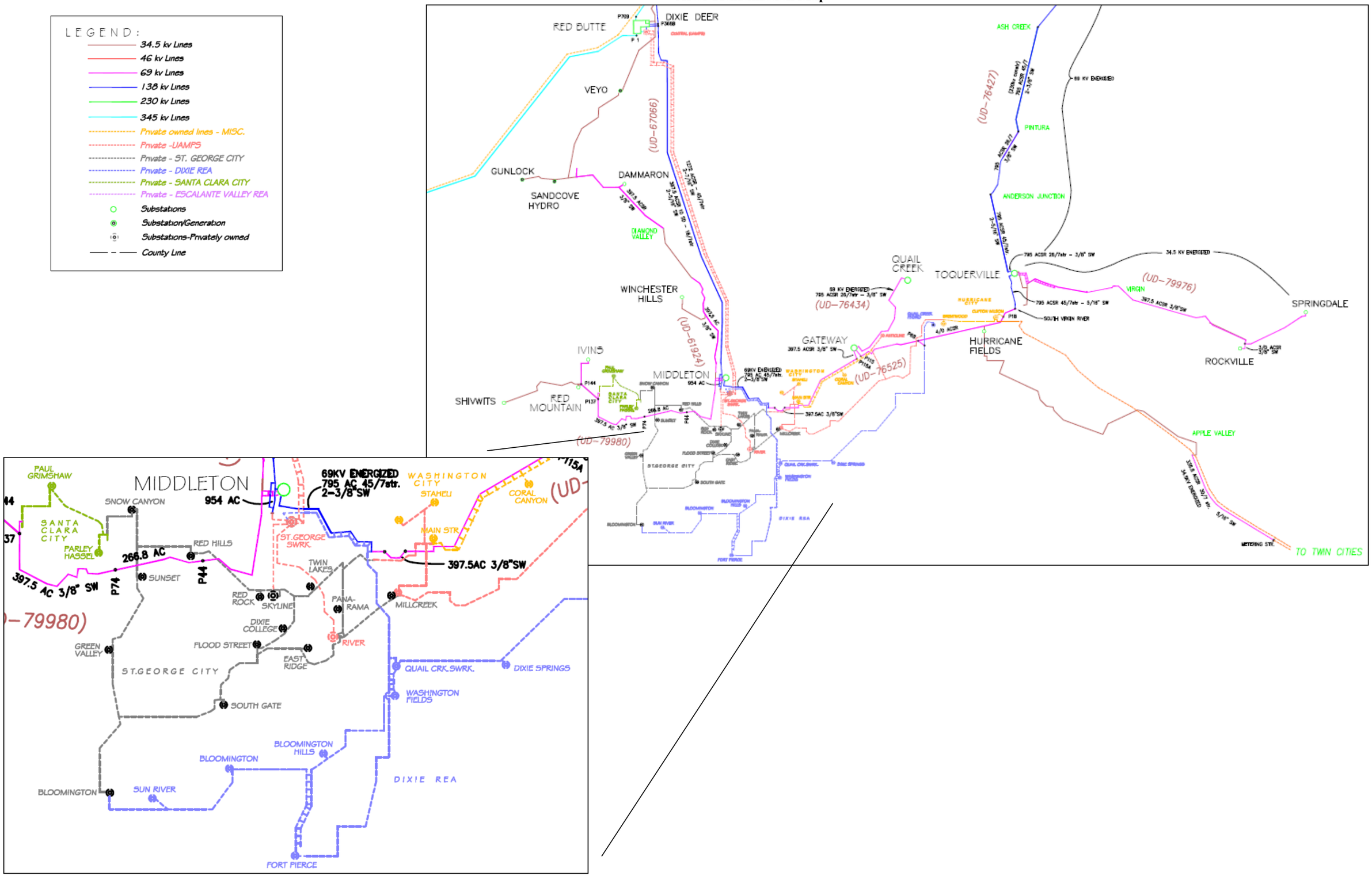

**Appendix B**
**Load Flow One-Line Diagram**

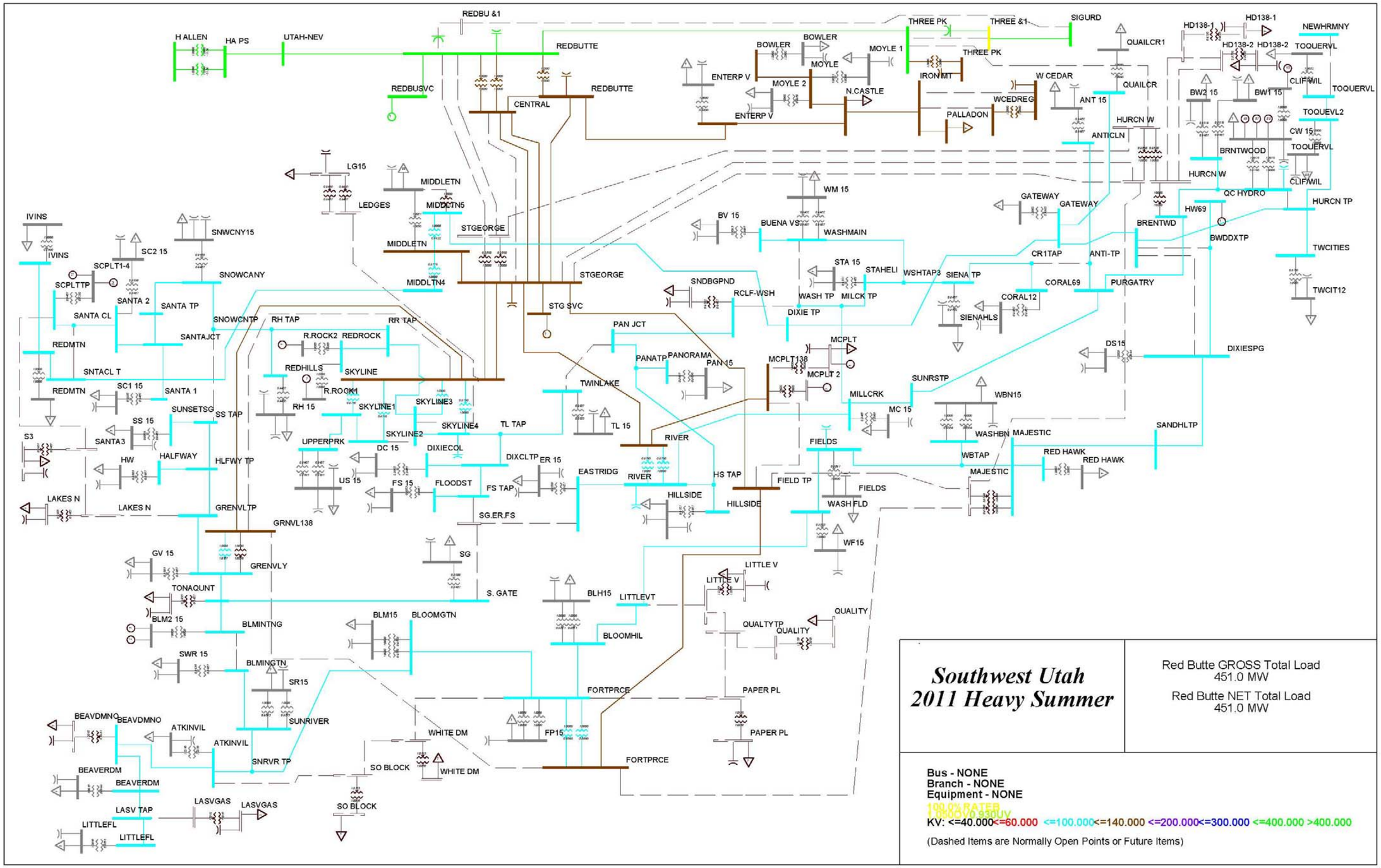

Southwest Utah 2011 Summer Prep Studies-Contingency List and Results
**Set B - Local Generation Off (0MW)**
Initial Conditions:
Gross Load: 451 MW
Net at Red Butte: 451 MW | 180 MVAr at Red Butte | 60 MVAr at Saint George | Modeled Power Factor 0.98
SG SVC Output: 5.3 MVAr | RB SVC Output: 55 MVAr

| | Contingency | General Results | Initial Load Lost | Restoration and Switching | Additional |
|---|---|---|---|---|---|
| **0** | System Normal (no outage) | No overload conditions or voltage concerns | | | |
| **1** | Loss of Red Butte 345-138 kV or One Central 345-138 kV Transformer | no issues | | | |
| **2** | Loss of Central-St. George #2 138 kV Line | no issues | | | This line was assumed to be re-terminated in the CB462 bay where the #1 line used to be |
| **3** | Loss of Red Butte-St. George 138 kV Line (former Central-St.George #1 Line) | 100% of 240 MVA limit on Central-Red Butte 138 kV tie (83% of SPOL) | None | na | |
| **4** | Loss of New 138 kV Line Central-St. George (future 345 kV line) | Remaining Central/Red Butte - St. George lines load to 104% of 200 MVA (87% of SPOL) | None | na | |
| **5** | SG or RB SVC Outage | see Main-Grid Operating Studies | | | |
| **6** | Sigurd-Red Butte Outage | see Main-Grid Operating Studies | | | |
| **7** | Red Butte-Harry Allen Outage | see Main-Grid Operating Studies | | | |
| **8** | Loss of St George-Fields 138 kV | Dixie out of power | 98 MW initial load lost | Fields-Mill Ck 138 kV line switched in - loads St.George-River line to 108% of 200 MVA (90% of SPOL) | all load restored |
| | | | | | 138 kV Looped operation would prevent initial load lost |
| **9A** | Loss of Fields-Ft. Pierce 138 kV line | Dixie out of power | 98 MW initial load lost | Bloomington 69 kV tie closed | Restored 45 MW from Bloomington tie (limited by Bloomgtn-SunR at 99% of 45 MVA) |
| | | | (35 MW cannot be restored w/o further switching) | Brentwood 69 kV tie closed in | Restored 18 MW from Brentwood (limited by Midltn-GtWy 69 kV to 100% of 45 MVA) |
| **9B** | Loss of Fields-Ft. Pierce 138 kV line | Dixie out of power | 98 MW initial load lost | **<u>In addition to switching in 9A:</u>** | |
| | | | (with this additional switching 68 MW of 98 MW can be restored) | Shift Twin Cities load to Hurricane City (Blmgtn Hills 69kV voltage 91%) | Additional 5 MW from Brentwood tie |
| **10** | Loss of St. George-Middleton 138 kV tie | RMP load out of power | 58 MW load initially lost | Shift Toquerville load to Coleman (18 MW) | 33 MW of 55 can be restored if extended outage or no local Gen |

| | | | | | |
|---|---|---|---|---|---|
| | | | | ClifWil 69 kV tie closed in (pick up TwinCities, Gateway, QuailCk) | |
| | | | | 0 of 9 MW on 34.5 can backup | |
| | | | | Santa Clara-Red Mtn tie closed in (restore 10 of 17 MW b/c Santa Clara Gen is off) | |
| **11** | Coleman-New Harmony 69 kV outage | NewHaromny loads lost | 3 MW lost initially | Open NewHarmony-Coleman, close Toquerville tie | all load restored |
| **12** | St. George-Skyline 138 kV #1 or #2 | Remaining line at 75% of 200 MVA | none | | |
| **13** | St. George-River 138 kV line | River Substation Load Lost | 114 MW lost initially | Fields-MillCk 138 kV tie close in | All load can restore with local gen on or 69 kV load shifting to Grn Vly |
| | | | | Shift East Ridge and Flood St. to Green Valley | 138 kV Looped operation would prevent initial load lost |
| **14** | Skyline-Green Valley 138 kV line or Green Valley 138-69 Transformer | Green Valley Load Lost | 50 MW lost initially | Sunset-SnowCyn tie closed in | All load restored |
| **15** | Skyline #3 138-69 kV outage (93MVA bank) | Transformer #4 loads to 113% of 75 MVA | none | Shift 12 MW (Flood St) to either River or Green Valley Substations | All load restored by transferring 15 MW |
| **16** | River 138-69 kV #1 or #2 outage | Overload backup transformer 156% of 75 MVA | 114 MW lost initially | Shift East Ridge to Green Valley<br>Shift Panorama and Hillside to Skyline | All load restored |
| **17** | Purgatory-Brentwood 69 kV line | | 30 MW lost Initially | Shift Toquerville to Coleman<br><br>Shift Brentwood, ClifWilson to RMP Middleton line | All loads restored with minimum 10 MW Gen. restored at Clif Wilson |
| **18** | Mill Creek-Purgatory 69 kV line | | 35 MW lost Initially | Close AnticlineTp to CR1Tap (Coral through Washington) | All loads restored (MillCk-MillCk Tp loads to 87% of 80 MVA) |
| **19** | River- Mill Creek 69 kV line | | 78 MW lost Initially | Close Red Cliff Wash to Washington Tap (through Washington) | 58 MW of 78 MW can be restored<br><br>Most can be restored by running local gen |
| | | | | | Or shift Toquerville to Coleman, pick up ClifWils on RMP line |
| **20** | Red Rock Tp - Red Hills 69 kV line | | 46 MW lost Initially | Close Sunset-SnowCanyon Tap | All load restored (GrnVly TRF 70% of 140 MVA) |
| **21** | Mill Creek Unit #1 Generator | no issues | none | | |

# Appendix D (page 1)

2011 - All Local Generation Off - No Additional System Improvements | Total Load 451 MW

| 50MW Loss Threshold Scenarios | Load Loss (MW) | Comments |
|---|---|---|
| OPEN LINE FROM BUS 65553 TO BUS 66261 CKT 1 / 'FORTPRCE 138.00' TO 'FIELDS 138.00' | 97 | FtPierce-GreenVly 138 kV Line |
| OPEN LINE FROM BUS 65940 TO BUS 66420 CKT 1 / 'MIDDLETN 138.00' TO 'STGEORGE 138.00' | 59 | Convert Middleton-HurricaneW to 138 kV |
| OPEN LINE FROM BUS 65967 TO BUS 66298 CKT 1 / 'MILLCRK 69.000' TO 'RIVER 69.000' | 78 | |
| OPEN LINE FROM BUS 66261 TO BUS 66420 CKT 1 / 'FIELDS 138.00' TO 'STGEORGE 138.00' | 97 | Close Fields-Millcreek Tie |
| OPEN LINE FROM BUS 66297 TO BUS 66420 CKT 1 / 'RIVER 138.00' TO 'STGEORGE 138.00' | 114 | Close Fields-Millcreek Tie |

Overload Scenarios

| Contingency | Monitored Element(s) | % Loading | Comments |
|---|---|---|---|
| OPEN LINE FROM BUS 66297 [RIVER 138.00] TO BUS 66298 [RIVER 69.000] CKT 1 | 66297 RIVER 138.00 66298 RIVER 69.000 2 | 156.64 | recommend Hurricane West 138/69 ~2013 |
| OPEN LINE FROM BUS 66297 [RIVER 138.00] TO BUS 66298 [RIVER 69.000] CKT 2 | 66297 RIVER 138.00 66298 RIVER 69.000 1 | 156.42 | recommend Hurricane West 138/69 ~2013 |
| OPEN LINE FROM BUS 65159 [BLH15 12.470] TO BUS 65174 [BLOOMHIL 69.000] CKT 1 | 65159 BLH15 12.470 65174 BLOOMHIL 69.000 2 | 133.2 | |
| OPEN LINE FROM BUS 65159 [BLH15 12.470] TO BUS 65174 [BLOOMHIL 69.000] CKT 2 | 65159 BLH15 12.470 65174 BLOOMHIL 69.000 1 | 132.92 | |
| OPEN LINE FROM BUS 65158 [BLM15 12.470] TO BUS 65172 [BLOOMGTN 69.000] CKT 2 | 65158 BLM15 12.470 65172 BLOOMGTN 69.000 1 | 124.38 | |
| OPEN LINE FROM BUS 65158 [BLM15 12.470] TO BUS 65172 [BLOOMGTN 69.000] CKT 1 | 65158 BLM15 12.470 65172 BLOOMGTN 69.000 2 | 124.26 | |
| OPEN LINE FROM BUS 66187 [SKYLINE 138.00] TO BUS 66374 [SKYLINE3 69.000] CKT 1 | 66187 SKYLINE 138.00 66371 SKYLINE4 69.000 1 | 112.56 | recommend shifting loads to reduce loading |
| OPEN LINE FROM BUS 65338 [CLIF/WIL 69.000] TO BUS 65408 [CW 15 12.470] CKT 1 | 65338 CLIF/WIL 69.000 65408 CW 15 12.470 2 | 110.48 | |
| OPEN LINE FROM BUS 65338 [CLIF/WIL 69.000] TO BUS 65408 [CW 15 12.470] CKT 2 | 65338 CLIF/WIL 69.000 65408 CW 15 12.470 1 | 109.3 | |
| OPEN LINE FROM BUS 65553 [FORTPRCE 138.00] TO BUS 65554 [FORTPRCE 69.000] CKT 1 | 65174 BLOOMHIL 69.000 65554 FORTPRCE 69.000 1 | 100.09 | |

Voltage Deviation Scenarios

| Contingency | Monitored Element | Deviation | Comments |
|---|---|---|---|
| OPEN LINE FROM BUS 65338 [CLIF/WIL 69.000] TO BUS 65408 [CW 15 12.470] CKT 1 | 65339 CLIF WIL 0.4800 | 5.25% | |
| OPEN LINE FROM BUS 65338 [CLIF/WIL 69.000] TO BUS 65408 [CW 15 12.470] CKT 1 | 65408 CW 15 12.470 | 5.25% | |

# Appendix D (page 2)

| 2012 - All Local Generation Off | Total Load 469 MW |
|---|---|

Assumed System Improvements-
1)Fields-Millcreek 138 kV
2)FtPierce-GreenValley 138 kV
3)Skyline #3 add additional transformer
4)CilftonWilson add 3rd transformer
5)BloomingtonHills add 3rd transformer
6)DixieBloomington add 3rd transformer
7)Hurricane West 138 ring bus and 138/69 transformer

| N-0 Issues | Issue |
|---|---|
| 65174 BLOOMHIL 69.000 TO 65554 FORTPRCE 69.000 | 101% of 45 MVA |

| N-1 - 50MW Threshold Scenarios | Load Loss (MW) | Correction |
|---|---|---|
| OPEN LINE FROM BUS 65737 TO BUS 65738 CKT 1 / 'GRNVL138 138.00' TO 'GRENVLY 69.000 | 51 | |
| OPEN LINE FROM BUS 66830 TO BUS 66831 CKT F1 / 'HURCN W 138.00' TO 'HW69 69.000' | 79 | This indicates that two transformers should be installed initially |

N-1 Overload Scenarios

| Contingency | Monitored Element(s) | % Loading | Notes |
|---|---|---|---|
| OPEN LINE FROM BUS 66297 [RIVER 138.00] TO BUS 66298 [RIVER 69.000] CKT 1 | 66297 RIVER 138.00 66298 RIVER 69.000 2 | 101.45 | This could be mitigated by transfer addl load to Hurricane West (i.e. Sienna) |
| OPEN LINE FROM BUS 66297 [RIVER 138.00] TO BUS 66298 [RIVER 69.000] CKT 2 | 66297 RIVER 138.00 66298 RIVER 69.000 1 | 101.43 | This could be mitigated by transfer addl load to Hurricane West (i.e. Sienna) |

Central to St. George outage results in 108% of Normal (200 MVA) on remaining two lines but does not exceed SPOL rating

N-1 Voltage Deviation Scenarios

| Contingency | Monitored Element(s) | Deviation | Correction |
|---|---|---|---|
| OPEN LINE FROM BUS 66297 [RIVER 138.00] TO BUS 66298 [RIVER 69.000] CKT 1 | 30 buses above 3% but this is mitigated with the Hurricane West 138/69 substation | | |
| OPEN LINE FROM BUS 65553 [FORTPRCE 138.00] TO BUS 66261 [FIELD TP 138.00] CKT 1 | 66676 WF15 12.470 | -3.13% | No violations previoudly because load was lost for this outage |
| | 66998 BEAVERDM 12.450 | -3.10% | Could be mitigated with Majestic Substation installation |
| | 66996 LITTLEFL 12.450 | -3.10% | |
| | 66656 WBN15 12.470 | -3.07% | |
| | 66995 LITTLEFL 69.000 | -3.03% | |
| | 66994 LASV TAP 69.000 | -3.02% | |
| | 66416 SR15 12.470 | -3.02% | |
| | 66257 FIELDS 12.470 | -3.01% | |
| | 66997 BEAVERDM 69.000 | -3.00% | |
| | 66989 BEAVDMNO 69.000 | -3.00% | |

# Appendix D (page 3)

| 2013 - All Local Generation Off | Total Load 490 MW |
|---|---|

Assumed System Improvements in Addition to Pervious Year Improvements-
1) Majestic 138/69 kV Transformer
2) Hurricane West 138/69 kV #2 Transformer
3) Hurricane West to HD 138-1 138 kV and 138/12.5 kV Transformer (Hurricane City)
4) Skyline3 to LG 15 69 kV line
5) GreenVlyTp-LakesN-S3 69 kV line

| N-0 Issues | Issue |
|---|---|

| N-1 - 50MW Threshold Scenarios | Load Loss (MW) | Correction |
|---|---|---|
| OPEN LINE FROM BUS 65737 TO BUS 65738 CKT 1 / 'GRNVL138 138.00' TO 'GRENVLY 69.000' | 57 | |

N-1 Overload Scenarios

| Contingency | Monitored Element(s) | % Loading | Notes |
|---|---|---|---|
| OPEN LINE FROM BUS 66297 [RIVER 138.00] TO BUS 66298 [RIVER 69.000] CKT 1 | 66297 RIVER 138.00 66298 RIVER 69.000 2 | 106.08% | This could be mitigated by transfer addl load to Hurricane West (i.e. Sienna) |
| OPEN LINE FROM BUS 66297 [RIVER 138.00] TO BUS 66298 [RIVER 69.000] CKT 2 | 66297 RIVER 138.00 66298 RIVER 69.000 1 | 106.05% | This could be mitigated by transfer addl load to Hurricane West (i.e. Sienna) |

Central to St. George outage results in 112% of Normal (200 MVA) on remaining two lines but does not exceed SPOL rating

N-1 Voltage Deviation Scenarios

| Contingency | Monitored Element(s) | Deviation | Correction |
|---|---|---|---|
| OPEN LINE FROM BUS 65553 [FORTPRCE 138.00] TO BUS 66261 [FIELD TP 138.00] CKT 1 | 35 buses above 3% but Majestic 138/69 kV transformer installation mitigates all deviations | | |
| OPEN LINE FROM BUS 65737 [GRNVL138 138.00] TO BUS 66187 [SKYLINE 138.00] CKT 1 | 10 buses above 3% but Majestic 138/69 kV transformer installation mitigates all deviations | | |

# Appendix D (page 4)

| 2014 - All Local Generation Off | Total Load 512 MW |
|---|---|

Assumed System Improvements in Addition to Pervious Year Improvements-
1) Green Valley 138/69 #2 Transformer

| N-0 Issues | Issue |
|---|---|
| none | |

| N-1 - 50MW Threshold Scenarios | Load Loss (MW) | Correction |
|---|---|---|
| none | | |

N-1 Overload Scenarios

| Contingency | Monitored Element(s) | % Loading | Notes |
|---|---|---|---|
| OPEN LINE FROM BUS 66274 [REDBUTTE 138.00] TO BUS 66280 [REDBUTTE 345.00] CKT 1 | 65315 CENTRAL 138.00 66280 REDBUTTE 345.00 1 | 103.30% | Does not Exceed 65 degree rating of 280 MVA |
| | 65315 CENTRAL 138.00 66280 REDBUTTE 345.00 2 | 103.30% | Does not Exceed 65 degree rating of 280 MVA |
| OPEN LINE FROM BUS 66416 [SR15 12.470] TO BUS 66449 [SUNRIVER 69.000] CKT 1 | 66416 SR15 12.470 66449 SUNRIVER 69.000 2 | 101.36% | |
| OPEN LINE FROM BUS 66416 [SR15 12.470] TO BUS 66449 [SUNRIVER 69.000] CKT 2 | 66416 SR15 12.470 66449 SUNRIVER 69.000 1 | 101.36% | |

Central to St. George outage results in 118% of Normal (200 MVA) on remaining two lines but does not exceed SPOL rating

N-1 Voltage Deviation Scenarios

| Contingency | Monitored Element(s) | Deviation | Correction |
|---|---|---|---|
| none | | | |

# Appendix D (page 5)

| 2015 - All Local Generation Off | Total Load 541 MW |
|---|---|

Assumed System Improvements in Addition to Pervious Year Improvements-
1) Sigurd-Red Butte #2 345 kV

| N-0 Issues | Issue |
|---|---|
| FORTPRCE - BLOOMGTN 69 kV line | 95% of 45 MVA |
| DIXCLTP - TL TAP 1 69kV | 98% of 28 MVA |

| N-1 - 50MW Threshold Scenarios | Load Loss (MW) | Correction |
|---|---|---|
| none | | |

N-1 Overload Scenarios

| Contingency | Monitored Element(s) | % Loading | Notes |
|---|---|---|---|
| OPEN LINE FROM BUS 65315 [CENTRAL 138.00] TO BUS 66420 [STGEORGE 138.00] CKT 2 (new li | 65315 CENTRAL 138.00 66420 STGEORGE 138.00 1 | 103.67% | 104% of 240 MVA SPOL Rating |
| | 66274 REDBUTTE 138.00 66420 STGEORGE 138.00 1 | 103.67% | 104% of 240 MVA SPOL Rating |
| OPEN LINE FROM BUS 65315 [CENTRAL 138.00] TO BUS 66420 [STGEORGE 138.00] CKT 1 | 65315 CENTRAL 138.00 66420 STGEORGE 138.00 2 | 99.00% | 99% of 288 MVA SPOL Rating |
| OPEN LINE FROM BUS 66274 [REDBUTTE 138.00] TO BUS 66280 [REDBUTTE 345.00] CKT 1 | 65315 CENTRAL 138.00 66280 REDBUTTE 345.00 1 | 97.45% | Of 280 MVA (65 degree rise) |
| | 65315 CENTRAL 138.00 66280 REDBUTTE 345.00 2 | 97.45% | Of 280 MVA (65 degree rise) |
| OPEN LINE FROM BUS 66297 [RIVER 138.00] TO BUS 66298 [RIVER 69.000] CKT 1 | 66297 RIVER 138.00 66298 RIVER 69.000 2 | 102.90% | |
| OPEN LINE FROM BUS 66297 [RIVER 138.00] TO BUS 66298 [RIVER 69.000] CKT 2 | 66297 RIVER 138.00 66298 RIVER 69.000 1 | 102.88% | |
| OPEN LINE FROM BUS 66416 [SR15 12.470] TO BUS 66449 [SUNRIVER 69.000] CKT 1 | 66416 SR15 12.470 66449 SUNRIVER 69.000 2 | 108.05% | |
| OPEN LINE FROM BUS 66416 [SR15 12.470] TO BUS 66449 [SUNRIVER 69.000] CKT 2 | 66416 SR15 12.470 66449 SUNRIVER 69.000 1 | 108.05% | |

N-1 Voltage Deviation Scenarios

| Contingency | Monitored Element(s) | Deviation | Correction |
|---|---|---|---|
| OPEN LINE FROM BUS 65737 [GRNVL138 138.00] TO BUS 66187 [SKYLINE 138.00] CKT 1 | 66418 SS 15 13.200 | -3.03% | 69 kV Shunt Capacitor(s) |

# Appendix D (page 6)

| 2016 - All Local Generation Off | Total Load 566 MW |
|---|---|

Assumed System Improvements in Addition to Pervious Year Improvements-
1) Sunriver Increase Transformer Capacity
2) DIXCLTP - TL TAP 69kV Increase Conductor Size
3) removed (Central-StGeorge Energize 4th 138 kV Circuit)
4) Replace a Central 345/138 kV Tranformer with 450 MVA
5) Install FtPierce-So Block-Atkinvil 69 kV circuit

| N-0 Issues | Issue |
|---|---|

| N-1 - 50MW Threshold Scenarios | Load Loss (MW) | Correction |
|---|---|---|
| OPEN LINE FROM BUS 66293 TO BUS 66304 CKT 1 / 'RH TAP 69.000' TO 'RR TAP 69.000' | 52 MW | |
| OPEN LINE FROM BUS 66304 TO BUS 66374 CKT 1 / 'RR TAP 69.000' TO 'SKYLINE3 69.000' | 52 MW | |

N-1 Overload Scenarios

| Contingency | Monitored Element(s) | % Loading | Notes |
|---|---|---|---|
| OPEN LINE FROM BUS 66297 [RIVER 138.00] TO BUS 66298 [RIVER 69.000] CKT 1 | 66297 RIVER 138.00 66298 RIVER 69.000 2 | 107.45% | |
| OPEN LINE FROM BUS 66297 [RIVER 138.00] TO BUS 66298 [RIVER 69.000] CKT 2 | 66297 RIVER 138.00 66298 RIVER 69.000 1 | 107.41% | |
| OPEN LINE FROM BUS 65315 [CENTRAL 138.00] TO BUS 66420 [STGEORGE 138.00] CKT 2 | 65315 CENTRAL 138.00 66420 STGEORGE 138.00 1 | 109.00% | Of 240 MVA |
| | 66274 REDBUTTE 138.00 66420 STGEORGE 138.00 1 | 109.00% | Of 240 MVA |
| OPEN LINE FROM BUS 65315 [CENTRAL 138.00] TO BUS 66420 [STGEORGE 138.00] CKT 1 | 65315 CENTRAL 138.00 66420 STGEORGE 138.00 2 | 104.14% | |
| OPEN LINE FROM BUS 66274 [REDBUTTE 138.00] TO BUS 66420 [STGEORGE 138.00] CKT 1 | 65315 CENTRAL 138.00 66420 STGEORGE 138.00 2 | 104.14% | |

N-1 Voltage Deviation Scenarios

| Contingency | Monitored Element(s) | Deviation | Correction |
|---|---|---|---|
| OPEN LINE FROM BUS 65737 [GRNVL138 138.00] TO BUS 66187 [SKYLINE 138.00] CKT 1 | 66418 SS 15 13.200 | -3.26% | 69 kV Shunt Capacitor(s) |
| | 66446 HW 13.200 | -3.13% | |
| | 66422 SG 13.200 | -3.09% | |
| | 66835 LAKES N 13.200 | -3.06% | |

| 2017 - All Local Generation Off | Total Load 588 MW |
|---|---|

Assumed System Improvements in Addition to Pervious Year Improvements-
1) Central-StGeorge Energize 4th 138 kV Circuit

| N-0 Issues | Issue |
|---|---|

| N-1 - 50MW Threshold Scenarios | Load Loss (MW) | Correction |
|---|---|---|
| OPEN LINE FROM BUS 66293 TO BUS 66304 CKT 1 / 'RH TAP 69.000' TO 'RR TAP 69.000' | 54 MW | |
| OPEN LINE FROM BUS 66304 TO BUS 66374 CKT 1 / 'RR TAP 69.000' TO 'SKYLINE3 69.000' | 54 MW | |

N-1 Overload Scenarios

| Contingency | Monitored Element(s) | % Loading | Notes |
|---|---|---|---|
| OPEN LINE FROM BUS 66297 [RIVER 138.00] TO BUS 66298 [RIVER 69.000] CKT 1 | 66297 RIVER 138.00 66298 RIVER 69.000 2 | 111.57% | |
| OPEN LINE FROM BUS 66297 [RIVER 138.00] TO BUS 66298 [RIVER 69.000] CKT 2 | 66297 RIVER 138.00 66298 RIVER 69.000 1 | 111.52% | |
| OPEN LINE FROM BUS 66297 [RIVER 138.00] TO BUS 66420 [STGEORGE 138.00] CKT 1 | 66261 FIELD TP 138.00 66420 STGEORGE 138.00 1 | 100.07% | 1 Millcreek Unit on pushes this issue out to 2019 |
| OPEN LINE FROM BUS 65554 [FORTPRCE 69.000] TO BUS 65569 [FP15 12.470] CKT 1 | 65554 FORTPRCE 69.000 65569 FP15 12.470 2 | 105.25% | |
| OPEN LINE FROM BUS 65554 [FORTPRCE 69.000] TO BUS 65569 [FP15 12.470] CKT 2 | 65554 FORTPRCE 69.000 65569 FP15 12.470 1 | 105.25% | |
| OPEN LINE FROM BUS 66655 [WASHBN 69.000] TO BUS 66656 [WBN15 12.470] CKT 1 | 66655 WASHBN 69.000 66656 WBN15 12.470 2 | 103.49% | |
| OPEN LINE FROM BUS 66655 [WASHBN 69.000] TO BUS 66656 [WBN15 12.470] CKT 2 | 66655 WASHBN 69.000 66656 WBN15 12.470 1 | 103.49% | |

N-1 Voltage Deviation Scenarios

| Contingency | Monitored Element(s) | Deviation | Correction |
|---|---|---|---|
| OPEN LINE FROM BUS 65737 [GRNVL138 138.00] TO BUS 66187 [SKYLINE 138.00] CKT 1 | 66418 SS 15 13.200 | -3.24% | 69 kV Shunt Capacitor(s) |
| | 66446 HW 13.200 | -3.19% | |
| | 66835 LAKES N 13.200 | -3.12% | |
| | 66843 TONAQUNT 13.200 | -3.10% | |
| | 65743 GV 15 13.200 | -3.05% | |
| | 66836 S3 12.470 | -3.05% | |
| | 66422 SG 13.200 | -3.01% | |
| | 66453 SUNSETSG 69.000 | -3.00% | |
| | 66417 SS TAP 69.000 | -3.00% | |

| 2018 - All Local Generation Off | Total Load 614 MW |
|---|---|

Assumed System Improvements in Addition to Pervious Year Improvements-
1) WASHBN Additional Transformer Capacity
2) FORTPRCE Additional Transformer Capcity (69/12.5 kV)
3) RIVER Additional Transformer Capacity (138/69 kV)
4) 69 kV Capacitor Addition at GreenValley (9MVAr)

| N-0 Issues | Issue |
|---|---|

| N-1 - 50MW Threshold Scenarios | Load Loss (MW) | Correction |
|---|---|---|
| OPEN LINE FROM BUS 66293 TO BUS 66304 CKT 1 / 'RH TAP 69.000' TO 'RR TAP 69.000' | 56 MW | |
| OPEN LINE FROM BUS 66304 TO BUS 66374 CKT 1 / 'RR TAP 69.000' TO 'SKYLINE3 69.000' | 56 MW | |

N-1 Overload Scenarios

| Contingency | Monitored Element(s) | % Loading | Notes |
|---|---|---|---|
| OPEN LINE FROM BUS 66297 [RIVER 138.00] TO BUS 66420 [STGEORGE 138.00] CKT 1 | 66261 FIELD TP 138.00 66420 STGEORGE 138.00 1 | 104.84% | 104% of 200 MVA |
| OPEN LINE FROM BUS 65315 [CENTRAL 138.00] TO BUS 66280 [REDBUTTE 345.00] CKT F | 66274 REDBUTTE 138.00 66280 REDBUTTE 345.00 1 | 101.11% | |
| OPEN LINE FROM BUS 66187 [SKYLINE 138.00] TO BUS 66420 [STGEORGE 138.00] CKT 1 | 66187 SKYLINE 138.00 66420 STGEORGE 138.00 2 | 91.00% | 109% of 200 MVA |

N-1 Voltage Deviation Scenarios

| Contingency | Monitored Element(s) | Deviation | Correction |
|---|---|---|---|
| OPEN LINE FROM BUS 66261 [FIELDS 138.00] TO BUS 66900 [MAJESTIC 138.00] CKT F | 66676 WF15 12.470 | -3.23% | |
| | 66257 FIELDS 12.470 | -3.21% | |
| | 66656 WBN15 12.470 | -3.21% | |
| | 66922 RED HAWK 12.450 | -3.10% | |
| | 65476 DS15 12.470 | -3.07% | |
| | 66258 QC HYDRO 69.000 | -3.04% | |
| | 65629 BWDDXTP 69.000 | -3.04% | |
| | 65464 DIXIESPG 69.000 | -3.04% | |
| | 66653 WASH FLD 69.000 | -3.04% | |
| | 66935 SANDHLTP 69.000 | -3.04% | |
| | 66259 FIELDS 69.000 | -3.04% | |
| | 66655 WASHBN 69.000 | -3.03% | |
| | 66657 WBTAP 69.000 | -3.02% | |
| | 66920 RED HAWK 69.000 | -3.01% | |
| | 66901 MAJESTIC 69.000 | -3.01% | |

| 2019 - All Local Generation Off | Total Load 638 MW |
|---|---|

Assumed System Improvements in Addition to Pervious Year Improvements-
1)

| N-0 Issues | Issue |
|---|---|

| N-1 - 50MW Threshold Scenarios | Load Loss (MW) | Correction |
|---|---|---|
| OPEN LINE FROM BUS 66293 TO BUS 66304 CKT 1 / 'RH TAP 69.000' TO 'RR TAP 69.000' | 58 MW | |
| OPEN LINE FROM BUS 66304 TO BUS 66374 CKT 1 / 'RR TAP 69.000' TO 'SKYLINE3 69.000' | 58 MW | |

N-1 Overload Scenarios

| Contingency | Monitored Element(s) | % Loading | Notes |
|---|---|---|---|
| OPEN LINE FROM BUS 65315 [CENTRAL 138.00] TO BUS 66280 [REDBUTTE 345.00] CKT F | 66274 REDBUTTE 138.00 66280 REDBUTTE 345.00 1 | 105.06% | |
| OPEN LINE FROM BUS 66274 [REDBUTTE 138.00] TO BUS 66280 [REDBUTTE 345.00] CKT 1 | 65315 CENTRAL 138.00 66280 REDBUTTE 345.00 F | 105.06% | |
| OPEN LINE FROM BUS 66187 [SKYLINE 138.00] TO BUS 66420 [STGEORGE 138.00] CKT 1 | 66187 SKYLINE 138.00 66420 STGEORGE 138.00 2 | | does not exceed 240 MVA |
| OPEN LINE FROM BUS 66187 [SKYLINE 138.00] TO BUS 66420 [STGEORGE 138.00] CKT 2 | 66187 SKYLINE 138.00 66420 STGEORGE 138.00 1 | | does not exceed 240 MVA |
| OPEN LINE FROM BUS 66297 [RIVER 138.00] TO BUS 66420 [STGEORGE 138.00] CKT 1 | 66261 FIELD TP 138.00 66420 STGEORGE 138.00 1 | 109.54% | |
| OPEN LINE FROM BUS 66261 [FIELD TP 138.00] TO BUS 66420 [STGEORGE 138.00] CKT 1 | 66297 RIVER 138.00 66420 STGEORGE 138.00 1 | | does not exceed 240 MVA |

N-1 Voltage Deviation Scenarios

| Contingency | Monitored Element(s) | Deviation | Correction |
|---|---|---|---|
| OPEN LINE FROM BUS 66261 [FIELDS 138.00] TO BUS 66900 [MAJESTIC 138.00] CKT F | 66676 WF15 12.470 | -3.57% | |
| | 66257 FIELDS 12.470 | -3.54% | |
| | 66656 WBN15 12.470 | -3.54% | |
| | 66922 RED HAWK 12.450 | -3.45% | |
| | 65476 DS15 12.470 | -3.40% | |
| | 65629 BWDDXTP 69.000 | -3.37% | |
| | 66258 QC HYDRO 69.000 | -3.37% | |
| | 65464 DIXIESPG 69.000 | -3.37% | |
| | 66935 SANDHLTP 69.000 | -3.36% | |
| | 66653 WASH FLD 69.000 | -3.36% | |
| | 66259 FIELDS 69.000 | -3.36% | |
| | 66655 WASHBN 69.000 | -3.35% | |
| | 66657 WBTAP 69.000 | -3.34% | |
| | 66920 RED HAWK 69.000 | -3.33% | |
| | 66901 MAJESTIC 69.000 | -3.32% | |
| | 66900 MAJESTIC 138.00 | -3.13% | |

| 2020 - All Local Generation Off | Total Load 663 MW |
|---|---|
| Assumed System Improvements in Addition to Pervious Year Improvements- | |

| N-0 Issues | Issue |
|---|---|
| ANTI-TP - PURGATRY 69 kV | 97% of 39 MVA |

| N-1 - 50MW Threshold Scenarios | Load Loss (MW) | Correction |
|---|---|---|
| OPEN LINE FROM BUS 66293 TO BUS 66304 CKT 1 / 'RH TAP 69.000' TO 'RR TAP 69.000' | 60 MW | |
| OPEN LINE FROM BUS 66304 TO BUS 66374 CKT 1 / 'RR TAP 69.000' TO 'SKYLINE3 69.000' | 60 MW | |

N-1 Overload Scenarios

| Contingency | Monitored Element(s) | % Loading | Notes |
|---|---|---|---|
| OPEN LINE FROM BUS 65315 [CENTRAL 138.00] TO BUS 66280 [REDBUTTE 345.00] CKT F | 66274 REDBUTTE 138.00 66280 REDBUTTE 345.00 1 | 109.18% | |
| OPEN LINE FROM BUS 66274 [REDBUTTE 138.00] TO BUS 66280 [REDBUTTE 345.00] CKT 1 | 65315 CENTRAL 138.00 66280 REDBUTTE 345.00 F | 109.18% | |
| OPEN LINE FROM BUS 66187 [SKYLINE 138.00] TO BUS 66420 [STGEORGE 138.00] CKT 1 | 66187 SKYLINE 138.00 66420 STGEORGE 138.00 2 | 99.09% | Of the SPOL 240 MVA rating |
| OPEN LINE FROM BUS 66187 [SKYLINE 138.00] TO BUS 66420 [STGEORGE 138.00] CKT 2 | 66187 SKYLINE 138.00 66420 STGEORGE 138.00 1 | 99.09% | Of the SPOL 240 MVA rating |
| OPEN LINE FROM BUS 66297 [RIVER 138.00] TO BUS 66420 [STGEORGE 138.00] CKT 1 | 66261 FIELD TP 138.00 66420 STGEORGE 138.00 1 | 114.61% | Of the SPOL 200 MVA rating |
| OPEN LINE FROM BUS 66261 [FIELD TP 138.00] TO BUS 66420 [STGEORGE 138.00] CKT 1 | 66297 RIVER 138.00 66420 STGEORGE 138.00 1 | | does not exceed 240 MVA rating |
| OPEN LINE FROM BUS 66261 [FIELD TP 138.00] TO BUS 66900 [MAJESTIC 138.00] CKT F | 65627 ANTI-TP 69.000 67546 PURGATRY 69.000 1 | 100.70% | |

N-1 Voltage Deviation Scenarios

| Contingency | Monitored Element(s) | Deviation | Correction |
|---|---|---|---|
| OPEN LINE FROM BUS 65737 [GRNVL138 138.00] TO BUS 66187 [SKYLINE 138.00] CKT 1 | 66418 SS 15 13.200 | -3.24% | |
| | 66446 HW 13.200 | -3.19% | |
| | 66835 LAKES N 13.200 | -3.14% | |
| | 66843 TONAQUNT 13.200 | -3.12% | |
| | 66836 S3 12.470 | -3.07% | |
| | 65743 GV 15 13.200 | -3.06% | |
| | 66453 SUNSETSG 69.000 | -3.01% | |
| | 66417 SS TAP 69.000 | -3.01% | |
| | 66443 HALFWAY 69.000 | -3.01% | |
| | 65461 HLFWY TP 69.000 | -3.01% | |
| | 66422 SG 13.200 | -3.00% | |
| OPEN LINE FROM BUS 66261 [FIELDS 138.00] TO BUS 66900 [MAJESTIC 138.00] CKT F | 66676 WF15 12.470 | -4.05% | Majestic-Ft Pierce line mitigates this |
| | 66257 FIELDS 12.470 | -4.04% | |
| | 66656 WBN15 12.470 | -4.04% | |
| | 66922 RED HAWK 12.450 | -4.02% | |
| | 65476 DS15 12.470 | -3.97% | |
| | 65629 BWDDXTP 69.000 | -3.90% | |
| | 66258 QC HYDRO 69.000 | -3.90% | |
| | 65464 DIXIESPG 69.000 | -3.90% | |
| | 66935 SANDHLTP 69.000 | -3.89% | |
| | 66653 WASH FLD 69.000 | -3.86% | |
| | 66259 FIELDS 69.000 | -3.86% | |
| | 66655 WASHBN 69.000 | -3.86% | |
| | 66657 WBTAP 69.000 | -3.84% | |
| | 66920 RED HAWK 69.000 | -3.84% | |
| | 66901 MAJESTIC 69.000 | -3.83% | |
| | 66900 MAJESTIC 138.00 | -3.60% | |
| | 66584 TWCIT12 12.470 | -3.48% | |
| | 65641 SIENAHLS 12.470 | -3.31% | |
| | 65638 HD138-1 12.470 | -3.15% | |
| | 65363 CORAL12 12.470 | -3.15% | |
| | 66562 TOQUERVL 12.500 | -3.13% | |
| | 65744 ANT 15 12.470 | -3.13% | |
| | 65242 BW1 15 12.470 | -3.09% | |
| | 65243 BW2 15 12.470 | -3.09% | |
| | 66582 TWCITIES 69.000 | -3.06% | |
| | 66558 TOQUERVL 34.500 | -3.04% | |
| | 65624 GATEWAY 12.500 | -3.01% | |

2025 - All Local Generation Off Total Load 780 MW

Assumed System Improvements in Addition to Pervious Year Improvements-

1) Buena Vista 2nd TRF
2) Ivins TRF capacity increase
3) Reconductor Purgatory-Anticline TP
4) MillCreek TRF capacity increase
5) Toquerville TRF capcaity increase
6) HD138-1 TRF capacity increase
5) Reconductor Santa TP-Santa Jct
6) SC2 TRF capacity increase
7) 120 MVAr 345kV at Red Butte
8) Majestic-Ft. Pierce line
9) Single 345 kV RedButte-St. George line and single TRF

Scenario 1
345 double circuit RedButte-St.George
Add 138 kV line St.George-HurricaneW #2
Ft.Pierce-Majestic Line

| | | |
|---|---|---|
| St.George-River Outage | St.George-Fields Outage | Skyline-GreenVly Outage |
| St.George-Fields loads to 123% | St.George-River Loads to 114% | St.George-Fields Loads to 100% |

Scenario 2
345 double circuit RedButte-St.George
Add 138 kV line St.George-Fields #2
Ft.Pierce-Majestic Line

| | | |
|---|---|---|
| Fields-Majestic Outage | St.George-HurrW Outage | Majestic-HurrW Outage |
| no issue b/c of Ft.P-Majestice line | Fields-Majestic Loads to 121% | St.George-HurrW loads to 102% |
| | Majestic-HurrW loads to 97% | |

Scenario 2
345 double circuit RedButte-St.George
Add 138 kV line St.George-Fields #2
Add 138 kV line St.George-HurricaneW #2
Ft.Pierce-Majestic Line

no issues

Scenario 3
345 double circuit RedButte-St.George
345 St.George-HurrWest
Ft.Pierce-Majestic Line

St.George-River Outage
St.George-Fields loads to 95%

Scenario 4
345 double circuit RedButte-St.George
345 St.George-HurrWest-ThreePeaks
Ft.Pierce-Majestic Line

St.George-River Outage
St.George-Fields loads to 88%