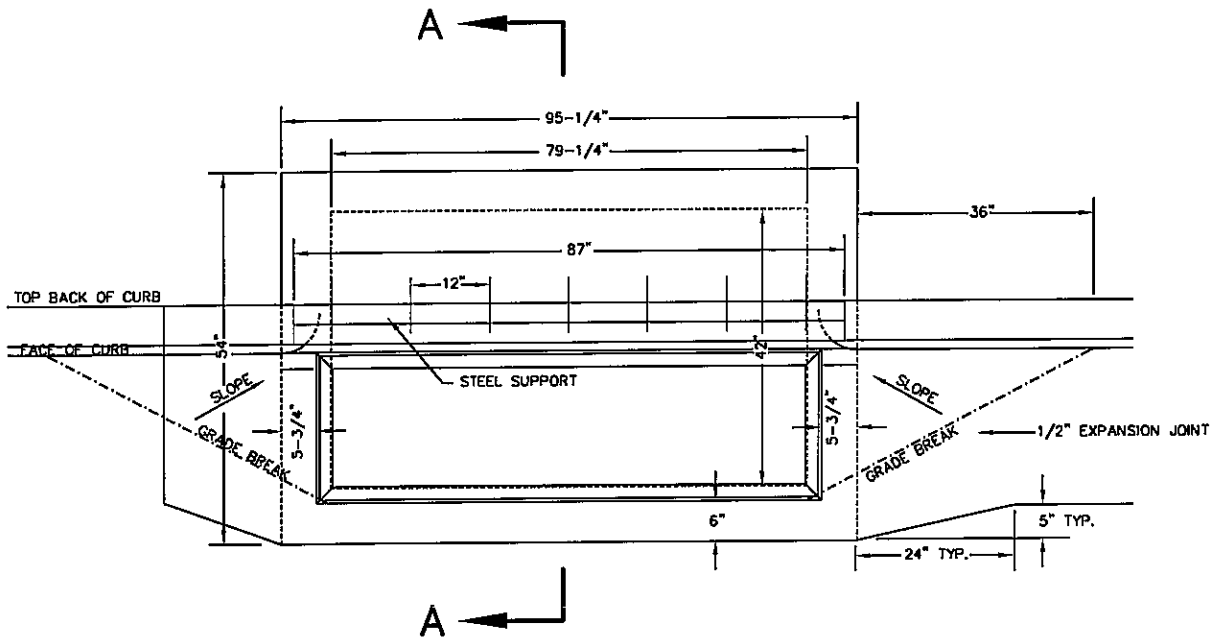

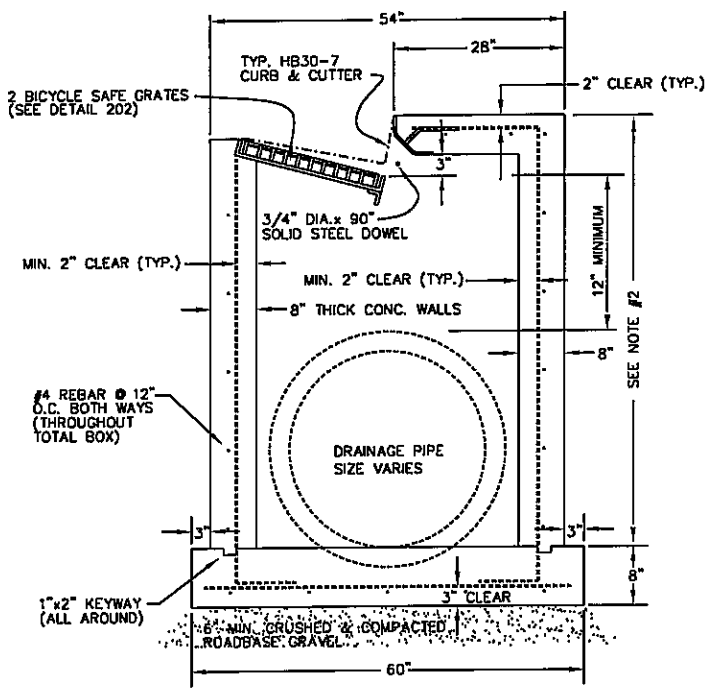

NOTES:

1- USE BICYCLE SAFE GRATES ONLY.

2- FOR PIPE SIZE GREATER THAN 42" DIAMETER AND 60" DEPTH ENGINEERED DESIGN REQUIRED.

SECTION A-A

CITY OF ST. GEORGE ENGINEERING DEPARTMENT

REVISIONS		
DATE	DESCRIPTION	BY

CURB INLET DOUBLE CATCH BASIN BOX

STANDARD DWG. NO.	
205	1 OF 2
APPROVED:	
DATE:	BY: LBB